City of Rowlett

Amended Meeting Agenda

City Council

4000 Main Street
Rowlett, TX 75088
www.rowlett.com

City of Rowlett City Council meetings are available to all persons regardless of disability. If you require special assistance, please contact the City Secretary at 972-412-6115 or write 4000 Main Street, Rowlett, Texas, 75088, at least 48 hours in advance of the meeting.

Tuesday, July 1, 2014 **5:15 P.M.** **Municipal Building – 4000 Main Street**

As authorized by Section 551.071 of the Texas Government Code, this meeting may be convened into closed Executive Session for the purpose of seeking confidential legal advice from the City Attorney on any agenda item herein.

The City of Rowlett reserves the right to reconvene, recess or realign the Regular Session or called Executive Session or order of business at any time prior to adjournment.

1. CALL TO ORDER

2. EXECUTIVE SESSION (5:15 P.M.)* Times listed are approximate

2A. The City Council shall convene into Executive Session pursuant to the Texas Government Code, §551.087 (Economic Development) and §551.071 (Consultation with Attorney) to receive legal advice from the City Attorney and to discuss the Rowlett Chamber of Commerce Lease Agreement for property located at 3910 Main Street. (30 minutes) THIS DISCUSSION WILL TAKE PLACE AT THE CONCLUSION OF THE REGULAR MEETING.

2B. The City Council shall convene into Executive Session pursuant to the Texas Government Code, §551.071 (Consultation with Attorney) to receive legal advice from the City Attorney and to discuss the lease agreement with American Golf Corporation and the Waterview Golf Course bonded indebtedness. (30 minutes)

3. WORK SESSION (5:45 P.M.)*

3A. Discuss the restructuring of the lease agreement with American Golf Corporation. (30 minutes).

3B. Discuss authorizing the issuance and sale of City of Rowlett, Texas Waterworks and Sewer System Revenue Bonds, Series 2014, Refunding of General Obligation Refunding Taxable Bonds, Series 2010A and General Obligations Taxable Bonds, Series 1997A. (30 minutes)

3C. Discuss Supervisory Control and Data Acquisition (SCADA) replacement. (45 minutes)

4. DISCUSS CONSENT AGENDA ITEMS

CONVENE INTO THE COUNCIL CHAMBERS (7:30 P.M.)*

INVOCATION

PLEDGE OF ALLEGIANCE

TEXAS PLEDGE OF ALLEGIANCE
Honor the Texas Flag; I pledge allegiance to thee, Texas, one state under God, one and indivisible.

5. PRESENTATIONS AND PROCLAMATIONS

5A. Proclamation recognizing Parks and Recreation Month.

5B. Hear presentation of the Monthly Financial report for the period ending May 31, 2014.

5C. Presentation of Texas Department of Transportation check to Keep Rowlett Beautiful.

5D. Update from the City Council and Management: Financial Position, Major Projects, Operational Issues, Upcoming Dates of Interest and Items of Community Interest.

6. CITIZENS' INPUT

At this time, three-minute comments will be taken from the audience on any topic. To address the Council, please submit a fully-completed request card to the City Secretary prior to the beginning of the Citizens' Input portion of the Council meeting. No action can be taken by the Council during Citizens' Input.

7. CONSENT AGENDA

The following may be acted upon in one motion. A City Councilmember or a citizen may request items be removed from the Consent Agenda for individual consideration.

7A. Consider action to approve minutes from the June 17, 2014, City Council Meeting and the June 20-21, 2014, City Council Retreat.

7B. Consider action to approve a resolution authorizing the final acceptance and release of retainage for the rehabilitation of Schrade Lift Station in the amount of $115,740.25 to Fuquay Incorporated and authorizing the Mayor to execute the necessary documents.

8. ITEMS FOR INDIVIDUAL CONSIDERATION

If a Public Hearing is listed, the City Council will conduct such public hearing to receive comments concerning the specific items listed in the agenda. Any interested persons may appear and offer comments, either orally or in writing; however, questioning of those making presentations will be reserved exclusively to the presiding officer as may be necessary to ensure a complete record. While any person with pertinent comments will be granted an opportunity to present them during the course of the hearing, the presiding officer reserves the right to restrict testimony in terms of time and repetitive content. Organizations, associations, or groups are encouraged to present their commonly held views and identical or similar comments through a representative member when possible. Presentations must

remain pertinent to the issues being discussed. A person may not assign a portion of his or her time to another speaker.

8A. Consider approving the listing of Councilmembers as liaisons to the various Boards and Commissions of the City along with regional entities through June, 2016.

8B. Consider action to approve a resolution amending the lease agreement with American Golf Corporation and restructuring the debt service for the Waterview Golf Course and authorizing the Mayor to execute the necessary documents, after approval of the City Attorney, for said contract.

8C. Conduct a public hearing and take action on a request to amend Planned Development Ordinance #070-07 to allow additional parking at the Andrews office building located at 1900 Dalrock Road. (PD14-718)

8D. Conduct a public hearing and take action on a request for a Special Use Permit to allow a foot reflexology massage establishment in the General Commercial/Retail Zoning District (C-2) at 5101 Rowlett Road, Suite 5115, Rowlett, Dallas County, Texas. (SUP14-714)

8E. Consider action to approve an ordinance authorizing the pricing parameters for the refunding of General Obligation Bonds related to the debt service at the Waterview Golf Course.

8F. Consider an ordinance authorizing the discharge and redemption of the City's General Obligation Refunding Bonds, Taxable Series 2010A; approving an escrow agreement; and enacting other provisions relating to the subject.

TAKE ANY NECESSARY OR APPROPRIATE ACTION ON CLOSED/EXECUTIVE SESSION MATTERS

9. ADJOURNMENT

Laura Hallmark

_____

Laura Hallmark, City Secretary

I certify that the above notice of meeting was posted on the bulletin boards located inside and outside the doors of the Municipal Center, 4000 Main Street, Rowlett, Texas, as well as on the City's website (www.rowlett.com) on the 27th day of June 2014, by 5:00 p.m.

City of Rowlett

Staff Report

4000 Main Street
P.O. Box 99
Rowlett, TX 75030-0099
www.rowlett.com

AGENDA DATE: 07/01/14 **AGENDA ITEM**: 2A

TITLE

The City Council shall convene into Executive Session pursuant to the Texas Government Code, §551.087 (Economic Development) and §551.071 (Consultation with Attorney) to receive legal advice from the City Attorney and to discuss the Rowlett Chamber of Commerce Lease Agreement for property located at 3910 Main Street. (30 minutes) THIS DISCUSSION WILL TAKE PLACE AT THE CONCLUSION OF THE REGULAR MEETING.

City of Rowlett

Staff Report

4000 Main Street
P.O. Box 99
Rowlett, TX 75030-0099
www.rowlett.com

AGENDA DATE: 07/01/14 **AGENDA ITEM**: 2B

TITLE

The City Council shall convene into Executive Session pursuant to the Texas Government Code, §551.071 (Consultation with Attorney) to receive legal advice from the City Attorney and to discuss the lease agreement with American Golf Corporation and the Waterview Golf Course bonded indebtedness. (30 minutes)

City of Rowlett

Staff Report

4000 Main Street
P.O. Box 99
Rowlett, TX 75030-0099
www.rowlett.com

AGENDA DATE: 07/01/14 **AGENDA ITEM**: 3A

TITLE

Discuss restructuring the lease agreement with American Golf Corporation. (30 minutes)

STAFF REPRESENTATIVE

Brian Funderburk, City Manager

SUMMARY

American Golf Corporation has made a proposal to restructure the lease agreement for Waterview Golf Course. The purpose of this agenda item is to outline the terms of the restructuring.

BACKGROUND INFORMATION

On September 1, 1999, the City of Rowlett entered into a lease agreement for Waterview Golf Course with American Golf Corporation (AGC). Among other things, the lease calls for AGC to manage the golf course and provides for a schedule of rental payments. These payments were originally designed around the anticipated annual debt on the bonds issued to build the course and contained an escalation over time. In June, AGC proposed to restructure the bonds at their cost. The proposal includes the complete defeasement of the 2010A bonds from a contribution of $1.19 million and the restructuring of the 1997A bonds from a contribution of $1.0 million that would reduce the total debt and extend the life of the 1997A bonds to 25-years. The defeasement of the 2010A bonds and the restructuring of the 1997A bonds would result in annual payments of approximately $250,000-$255,000 per year and AGC has requested that their annual rental payment be reset to match the payment of the bonds.

The current lease represents a 30-year agreement beginning May 1, 2000, and ending December 31, 2030. The agreement provides for two additional 5-year lease terms at option of Lessee. If exercised, the lease could be extended through the end of December 31, 2040.

DISCUSSION

As indicated previously, AGC has asked the City to consider restructuring the 1999 lease agreement. The terms of the proposal are as follows:

- AGC will invest $2.19M as follows:
  - $1.19M to completely defease the outstanding 2010A bonds.
  - $1.0M to buy down principal on 1997A bonds and restructure and extend the term for 25 years.
- City will modify rental income to match the new debt service schedule.

- AGC will exercise the option to extend agreement coterminous with new 25-year bond term. This will end their term on August 15, 2039.
- AGC will invest $75,000 to upgrade kitchen and appurtenances (i.e. tables, chairs, linens, etc). In addition, AGC will invest $139,618 to complete improvements to the clubhouse.
- AGC will set aside 3 percent of annual revenue into a CapEx fund for future improvements.

On May 20, 2014, City staff presented a recommended list of projects from the Golf Advisory Board as well as the funding strategy. This list totaled $830,448, which would be funded by a combination of contributions from the Waterview HOA, existing funds in the City's Golf Fund, and a 3-year note for the remaining balance. Under AGC's proposal, alternate #1 from the clubhouse totaling $147,056 will be removed, the City's portion in up-front cash from the Golf Fund would increase by $172,682 and AGC would cover the balance of $139,618 with no financing necessary. In addition, the City will retain a reserve totaling $255,000, equivalent to one-year debt service. The table below outlines the major changes to the projects.

Projects	Description	Projected Cost as of 5-20-14	Projected Cost as of 7-1-14	$ Change
1	**Waterview Clubhouse Improvements**	$518,304	$518,304	$ -
-	**Remove alternate #1 – Dining Expansion**	-	(147,056)	(147,056)
1	**Revised Waterview Clubhouse Project**	$518,304	$371,248	$(147,056)
2	**Add lake(s) on Hole #2**	71,288	71,288	-
3	**Drainage on Hole #10**	46,175	46,175	-
4	**New Bunkers**	34,880	34,880	-
5	**Replace retaining wall on Hole #18 tee box**	150,801	150,801	-
6	**Add two tee boxes on Hole #6 and Hole #16**	9,000	9,000	-
	Total recommended expenditures	$830,448	$683,392	$(147,056)
	Contribution from Waterview HOA	(31,000)	(31,000)	-
	Net cost	$799,448	$652,392	$(147,056)
	Funded from Golf Fund	(340,092)	(512,774)	(172,682)
	Net shortfall – Original (City would finance over 3 years)	$459,356	**$139,618**	$(319,738)
	Net shortfall – Revised (American Golf covers the difference)	Balance covered by City	**Balance covered by AGC**	n/a
City retains a reserve of $255,000, equivalent to one-year debt service based on the debt restructuring.				

The current and proposed annual debt service payment schedule is listed in the table below. Even with the extension of the 1997A bonds to 25-years, total debt will be reduced by $728,573 due to the $2.19 million contribution from AGC.

Debt Service Projections - Current vs AGC Proposal

Fiscal Year	Current (1)	AGC Proposal (2)	Change
2015	$396,430	$254,559	($141,871)
2016	444,402	253,830	(190,572)
2017	501,305	252,990	(248,315)
2018	541,306	251,541	(289,765)
2019	569,265	254,556	(314,709)
2020	588,241	252,092	(336,149)
2021	603,600	253,352	(350,248)
2022	613,842	254,442	(359,400)
2023	622,798	250,362	(372,436)
2024	641,921	251,282	(390,639)
2025	656,540	252,032	(404,508)
2026	669,643	251,572	(418,071)
2027	94,993	250,902	155,909
2028	95,139	250,022	154,883
29-39	-	2,777,318	2,777,318
Total	$7,039,425	$6,310,852	($728,573)

Note: Current principal balance for the taxable 1997A Variable Rate Bond is $4,910,000. It will be $4,665,000 after FY2014.

(1) Includes the current debt structure for the 2010A Bonds and the 1997A Variable Rate Bonds assuming 12M LIBOR Forward Rates.

(2) Proposed debt structure assuming 2010A Bonds are defeased and the 1997A Bonds are restructured.

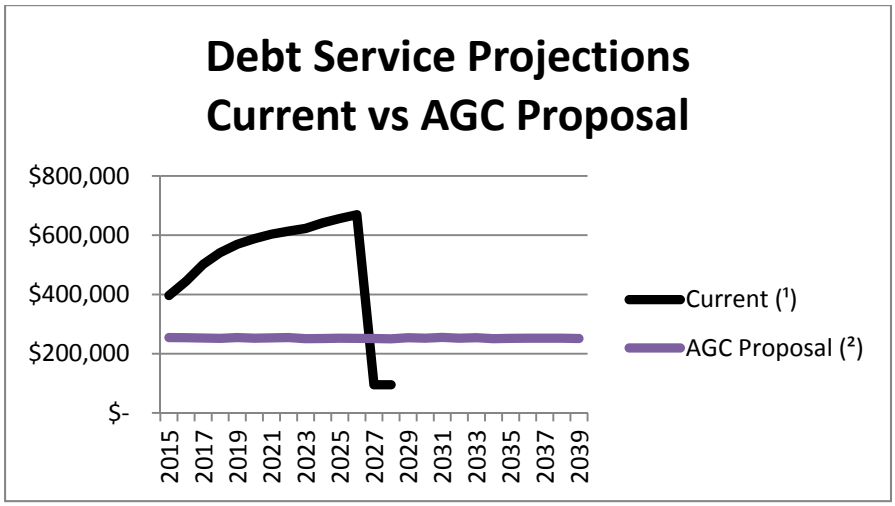

What does each party get out of this deal?

City of Rowlett	American Golf Corporation
• Adds certainty that the lease agreement will continue beyond the initial 30 years (i.e. 9 more years). • Overall annual debt service is reduced to about $250k-$255k and the risk of variability from the 1997A bonds, which are currently tied to the 12-month LIBOR rate is eliminated. • Total debt is reduced by about $728k. • The City does not have to finance the clubhouse improvements, which would have cost approximately $480,000 with interest. • AGC will fund a cap-ex fund for future improvements that will be based on 3% of total revenue.	• Reduces the overall fixed rent and eliminates the built-in escalator, thereby providing future stability. • Reduces overall cost of operations by $6.0 million, thereby providing future profitability. • Clubhouse improvements will improve ability to schedule larger tournaments and non-golf events such as weddings and receptions, which is expected to generate additional revenue.

There is one factor that the City of Rowlett specifically gives up. Because the current 1997A bonds are tied to the 12-month LIBOR rate, which are at historically low levels, the City does give up the ability to fund future improvements if rates remain low.

For example, in the chart below, you can see that the LIBOR rate is expected to climb sharply in the coming years. As a result, there is about $500,000 difference between the rental payments from AGC and the debt service to be paid over the next three years. Further out in the future, that gap narrows but the $500,000 is a very real amount that the City gives up. On the other hand, by modifying the improvements to the clubhouse and increasing the cash commitment from both the City and AGC, the City will not need to finance the improvements over the three years originally anticipated, yet the bulk of the improvements at the golf course will still be made.

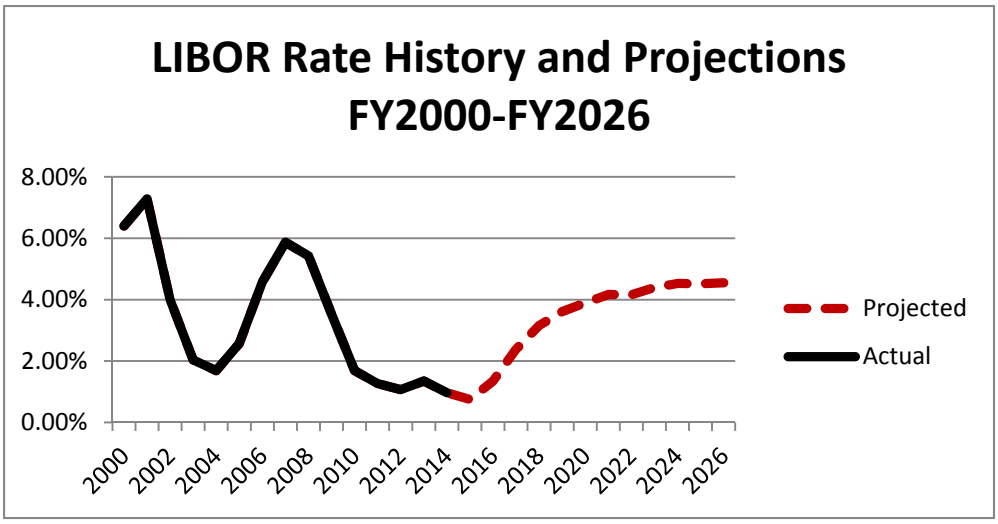

FINANCIAL/BUDGET IMPLICATIONS

The City will be required to defease the 2010A bonds and refinance the 1997A bonds based on the $2.19 million in contributions from American Golf. The overall annual debt service will drop to about $250,000-$255,000.

In addition, the City will increase its cash contribution to the clubhouse and other golf course improvements from $340,092 to $512,774, an increase of $172,682; however, the City will not need to finance the bulk of the project, which would have cost a total of $480,000 over three years.

Finally, the City's existing reserve of $427,682, which represents one year of debt service on the current schedule will decrease to $255,000, which represents one year of debt service on the new schedule.

RECOMMENDED ACTION

This item is submitted for Individual Consideration this evening.

ATTACHMENTS

Exhibit A – Amendment Number Two
Attachment 1 – 1999 Lease Agreement with American Golf Corporation

SECOND AMENDMENT TO LEASE
(Waterview Golf Club)

1. **Identification and Parties**. This Second Amendment To Lease (this "Amendment") is dated for identification purposes only as of July 1, 2014, and is entered into by and between City of Rowlett, Texas, a municipal corporation ("Lessor") and American Golf Corporation, a California corporation ("Lessee").

2. **Recitals**.

a. Lessor and Lessee are parties to that certain Lease dated September 1, 1999 (the "Original Lease") covering the real property commonly known as Waterview Golf Course located in Waterview, Texas, and certain other real property more particularly described in the Lease. The Original Lease was amended by that certain First Amendment of Lease and Amendment of Maturation Consulting Agreement dated as of December 21, 1999 (the "First Amendment," which together with the Original Lease is referred to herein as the "Lease"). All capitalized terms used herein and not otherwise defined shall have the same meaning given to them in the Lease.

b. Lessor and Lessee desire to further amend the Lease, among other things, to provide for the exercise of Lessee's Lease term renewal options pursuant to Section 4.2 of the Original Lease as more particularly provided for below.

NOW THEREFORE, in consideration of the foregoing recitals, the mutual covenants contained in this Amendment and for other good and valuable consideration, the receipt and sufficiency of which are hereby acknowledged, Lessor and Lessee hereby agree as set for the below.

3. **Amendment**.

a. Reduction of Bond Debt. On or prior to July 7, 2014, Lessee shall deposit the sum of Two Million One Hundred Ninety Thousand Dollars ($2,190,000) (the "Lessee Contribution Amount") into an escrow account (the "Escrow") mutually selected by Lessor and Lessee with express instructions that it may only be used as follows:

i. One Million Dollars ($1,000,000) of the Lessee Contribution Amount shall only be released as directed by Lessee for the purposes of reducing the principal balance of the existing debt on the Series 1997A Bonds. Lessor shall refinance the remaining $4,910,000 principal balance of the Series 1997A Bonds with a new twenty five (25) year term General Obligation Refunding Bonds, Taxable Series 2014, commencing on February 15, 2015 and maturing on August 15, 2039 (the "Refinancing Transaction").

ii. One Million One Hundred Ninety Dollars ($1,190,000) of the Lessee Contribution Amount shall only be released as directed by Lessee for the purposes of defeasing the Series 2010A Bonds (the "Defeasance Transaction"). The Series 2010A Bonds replaced and superseded the Series 1999B New Money Bonds referenced in Section 6.1(b) of the Original Lease.

The date on which the Refinancing Transaction and the Defeasance Transaction close shall be referred to herein as the "Closing Date." The Closing Date is anticipated to occur on August 14, 2014. If the Closing Date does not occur on or prior to August 31, 2014, the Escrow shall be instructed to immediately return the Lessee Contribution Amount to Lessee. The Lessee Contribution Amount shall only be used and released pursuant to the terms set forth above and for no other purpose unless expressly permitted by Lessee in writing.

b. Exercise of Lease Term Options. On the Closing Date, Lessee shall be deemed to have exercised both of its options to extend the Lease term under Section 4.2 of the Original Lease; provided, however, that in lieu of extending the Lease term for two (2) successive five (5) year periods as set forth in Section 4.2, the Lease term shall be extended for a total of nine (9) consecutive years following the currently scheduled expiration date of December 31, 2030. The new expiration date shall be December 31, 2039 (the "New Expiration Date"). Lessee shall have no further options to extend the Lease term.

c. New Fixed Minimum Rent. Commencing as of February 2015 and until the New Expiration Date, the Fixed Minimum Rent payable by Lessee shall be equal to the payments set forth in on the Revised Schedule 6.1(a) attached hereto and incorporated herein by this reference. From and after the Closing Date, Sections 6.1(b) through 6.1(d), inclusive, are hereby deleted.

d. Debt Deficit. Effective as of the Closing Date, Section 6.6 of the Original Lease, Section 4.1 of the First Amendment and all other references in the Lease to the Debt Deficit shall be deleted.

e. Base Line NOI. Following the Closing Date, the term "Base Line NOI" shall mean the Base Line NOI for Lease Year 2014 under the Lease (as adjusted by CPI as set forth in the Lease) and, thereafter through the New Expiration Date, the Base Line NOI shall continue to increase (if at all) from the Base Line NOI for the previous Lease Year by the percentage increase in the CPI in the twelve (12) month period ending on the last day of October in the immediately preceding Lease Year; provided, however, that in no event shall the Base Line NOI be reduced by reason of such computation.

f. Lessee's Upgrade Investment. Following the Closing Date, Lessee shall spend up to Seventy Five Thousand Dollars ($75,000) to perform work to upgrade the kitchen located within the clubhouse and purchase additional furniture, fixtures and equipment (e.g., tables, chairs, linens, flatware, etc.) for the purpose of hosting events as deemed necessary by Lessee, in its reasonable discretion. The kitchen upgrade work will be performed and completed in a good workman like manner.

g. Lessee's Clubhouse Investment. Following the Closing Date, Lessor and Lessee shall participate in the improvements to the Waterview Clubhouse, as designed by McCarthy Architects, excluding the expansion of the dining area, otherwise known as Alternate One, and that otherwise includes the basic design and all other alternates. Lessor shall contribute Two Hundred Thirty One Thousand Six Hundred Thirty Dollars ($231,630) and Lessee shall contribute One Hundred Thirty Nine Thousand Six Hundred and Eighteen Dollars ($139,618), for a total of Three Hundred Seventy One Thousand Two Hundred and Forty Eight Dollars ($371,248) to complete the project. If the final cost of the project differs from the total due to upgrades or

additional work, the party requesting the upgrade or additional work shall pay the additional cost. If the final cost is less than the total contribution of both parties, the difference shall be divided by the parties proportionately in accordance with the percentage that each party's contribution bears to the total. If additional costs are incurred that are not attributable to upgrades or additional work, Lessee shall bear those additional costs.

h. Capital Improvements Reserve. From and after January 1, 2019, the first sentence of Section 13.3 of the Original Lease shall be revised to read as follows: "In each Lease Year, Lessee shall credit in a capital improvement reserve fund ledger three percent (3%) of Gross Revenue for such Lease Year".

4. **Condition Precedent**. Notwithstanding anything herein to the contrary, the terms and conditions set forth in Sections 3(b) through 3(g) above are expressly conditioned upon the closing of both the Refinancing Transaction and the Defeasance Transaction. If the Closing Date does not occur on or before August 31, 2014, this Amendment and the terms and conditions set forth herein shall automatically become null and void, and of no further force or effect.

5. **Miscellaneous**.

a. No Other Changes. Except as expressly amended by this Amendment, the Lease remains unchanged and shall continue in full force and effect.

b. Counterparts and Facsimile. This Amendment may be executed in any number of counterparts, each of which shall be deemed an original and all of which, together, shall constitute one instrument. Any party may transmit its signature to this Amendment by facsimile, and such facsimile signature page shall be deemed an original ink signature for all purposes.

[Signature Page Follows Immediately]

IN WITNESS WHEREOF, Lessor and Lessee have entered into this Amendment as of the date first set forth above.

"Lessor"

CITY OF ROWLETT,
a Municipal corporation

By:_____
Printed Name:_____
Title:_____

"Lessee"

AMERICAN GOLF CORPORATION,
a California corporation

By:_____
Printed Name:_____
Title:_____

Revised Schedule 6.1(a)

LEASE YEAR	FIXED MINIMUM RENT
2015	$254,559.00
2016	$253,830.00
2017	$252,990.00
2018	$251,541.00
2019	$254,556.00
2020	$252,092.00
2021	$253,352.00
2022	$254,442.00
2023	$250,362.00
2024	$251,282.00
2025	$252,032.00
2026	$251,572.00
2027	$250,902.00
2028	$250,022.00
2029	$253,932.00
2030	$252,422.00
2031	$254,998.00
2032	$252,110.00
2033	$253,990.00
2034	$250,406.00
2035	$251,590.00
2036	$252,210.00

2037	$252,361.00
2038	$252,043.00
2039	$251,256.00

ATTACHMENT 1

WaterView Golf Club
Rowlett, Texas

OFFICE COPY

L E A S E

CITY OF ROWLETT, TEXAS

Lessor

and

OFFICE COPY

AMERICAN GOLF CORPORATION

Lessee

Dated September 1, 1999

OFFICE COPY

LEASE AGREEMENT

WATERVIEW GOLF CLUB
Rowlett, Texas

TABLE OF CONTENTS

Page

1. LEASED PREMISES 1
   1.1 Real Property 1
   1.2 Personal Property 1
   1.3 Water Rights 1

2. [Intentionally deleted.] 1

3. USE OF LEASED PREMISES 1
   3.1 Use 1
   3.2 Lessee's Right to Control Business Operations . . . 2
   3.3 Limitation on Lessee's Right to Control Business Operations 2
      3.3(a) Resident Discount 2
      3.3(b) Competent Management, Management Qualifications 3
      3.3(c) Public Use 3
      3.3(d) Disorderly Persons 3
      3.3(e) Illegal Activities 3
      3.3(f) Signs 3
      3.3(g) Lessee's Staff 4
      3.3(h) Sanitation 4
      3.3(i) Safety 4
      3.3(j) Habitation 4
      3.3(k) Golf Clubs/Organizations 4
      3.3(l) Golf Instruction 4
      3.3(m) Professional Shop Inventory, Merchandise and Equipment 5
      3.3(n) Ambassadors 5
      3.3(o) Golf Carts 5
      3.3(p) Dress and Conduct Standards 5
      3.3(q) Tournaments 5
      3.3(r) Charity Tournament 5
      3.3(s) Inspections 6

TABLE OF CONTENTS
(continued)

Page

3.3(t) Rowlett High Golf Team 6
3.3(u) Initial Fairway Cuts 7

4. TERM 7
4.1 Term 7
4.2 Option to Extend by Lessee 7
4.3 Surrender Upon Lease Expiration 8

5. LEASE YEAR DEFINED 8

6. RENT; SECURITY DEPOSIT 8
6.1 Minimum Rent 8
6.1(a) Fixed Minimum Rent 8
6.1(b) Additional Minimum Rent 8
6.1(c) Lease Years 28-30 and Option Periods . . . 9
6.1(d) Date References 10
6.2 Lessor Debt Deficit; Participation Rent. 10
6.3 Recovery of Net Operating Income. 13
6.4 Offsets. 13
6.5 Security Deposit. 14
6.6 Debt Deficit. 14

7. DEFINITIONS RELATING TO PAYMENT OF RENT. 15
7.1 Base Line NOI. 15
7.2 Gross Revenue. 17
7.3 Net Operating Income and NOI. 20
7.4 Operating Expenses. 20

8. REPORTING AND PAYMENT OF LESSOR DEBT DEFICIT AND PARTICIPATION RENT 20

9. MAINTENANCE AND EXAMINATION OF RECORDS; AUDIT; CONFIDENTIALITY; REMITTANCE OF UNDERPAYMENT; FAILURE TO FURNISH ACCOUNTING STATEMENT 21
9.1 Maintenance and Examination of Records 21
9.2 Audit 22
9.3 Confidentiality 22
9.4 Remittance of Underpayment 22
9.5 Failure to Furnish Accounting Statements 23

TABLE OF CONTENTS
(continued)

Page

10. TAXES 23
10.1 Real Property Taxes 23
10.2 Definition of Real Property Taxes 23
10.3 Personal Property Taxes 24

11. UTILITIES 24

12. PRORATION OF INCOME AND EXPENSES 24

13. CAPITAL IMPROVEMENTS 25
13.1 Completion of Golf Course 25
13.2 Capital Improvements Generally 28
13.2(a) Lessor's Approval Required 28
13.2(b) Closure 28
13.2(c) Contracting Procedures 28
13.2(d) Copy of Contract 29
13.2(e) Compliance With Laws 29
13.2(f) Builder's Risk and Other Insurance . . . 29
13.2(g) Discharge of Liens 29
13.2(h) Notification of Commencement of Work . . 30
13.3 Capital Improvements Reserve 30
13.4 Ownership of Improvements; No Liens 30
13.5 Curb Work 31

14. MAINTENANCE AND REPAIRS - LESSEE'S OBLIGATIONS 31

15. LESSOR'S COOPERATION 31

16. INSURANCE 32
16.1 Insurance Coverage 32
16.1(a) Liability Insurance 32
16.1(b) Worker's Compensation 32
16.1(c) Fire Insurance 32
16.1(d) Rental Interruption Insurance 32
16.2 General Provisions 33
16.3 Failure to Insure 33
16.4 Suspension of Operations 33
16.5 Acceptability of Insurers 33
16.6 Verification of Coverage 34

TABLE OF CONTENTS
(continued)

Page

17. INDEMNITY 34
17.1 Lessee's Indemnity 34
17.2 Lessor's Indemnity 34

18. DAMAGE AND RESTORATION 35
18.1 Total Destruction 35
18.2 Partial Destruction 35
18.3 Damage During the Last Two Years of the Lease Term 36
18.4 Rental Abatement and Term Extension 36
18.5 Application of Insurance Proceeds Upon Termination 37
18.6 Notification by Lessee 37

19. EMINENT DOMAIN 37
19.1 Total Taking 37
19.2 Partial Taking 37
19.3 Condemnation Award 37

20. REPRESENTATIONS, WARRANTIES AND COVENANTS 38
20.1 Power and Authority 38
20.2 No Conflict 38
20.3 Encumbrances 38
20.4 Title to Premises; Separate Legal Parcel 38
20.5 Utilities 39
20.6 Zoning: Licenses and Easements 39
20.7 No Third Party Rights 39
20.8 No Hazardous Materials 39
20.9 Termination of Contracts 40
20.10 Termination of Employees; Obligation of Benefits 40
20.11 No Litigation or Reassessment 41
20.12 No Violations of Law 41
20.13 Water Rights 41
20.14 Correct and Complete Documentation 42
20.15 No Omissions or Misstatements 42

TABLE OF CONTENTS
(continued)

Page

21. FRUSTRATION OF PURPOSE 42

22. ASSIGNMENT 43
22.1 Assignment by Lessor 43
22.2 Assignment by Lessee 43

23. BREACH AND REMEDIES 44
23.1 Conditions of Default 44
23.2 Remedies 46
23.2(a) Lessor's Right to Terminate 46
23.2(b) Right to Reenter 47
23.2(c) Right to Relet on Lessee's Account . . . 47
23.2(d) Effect of Reentry 48
23.2(e) Default Interest 48
23.2(f) Attorneys' Fees 48
23.2(g) Remedies Cumulative 48
23.2(h) Lessee's Remedies 49

24. RIGHT OF FIRST OFFER 49

25. QUIET ENJOYMENT 50

26. GENERAL PROVISIONS 50
26.1 Entire Agreement 50
26.2 Waiver 51
26.3 Memorandum of Lease 51
26.4 Time is of the Essence 51
26.5 Brokers 51
26.6 Notices and Addresses 51
26.7 Governing Law; Venue; Partial Invalidity 52
26.8 [Intentionally deleted.] 53
26.9 Holding Over 53
26.10 Estoppel Certificates 53
26.11 Nondisturbance Agreements 53
26.12 Captions 54
26.13 Exhibits 54
26.14 Further Assurances 55
26.15 No Joint Venture 55
26.16 No Interpretation Against Draftsman 55

TABLE OF CONTENTS
(continued)

Page

27. RESIDENTIAL DEVELOPMENT 55

28. NONDISCRIMINATION 56

29. EASEMENTS. 56

LEASE AGREEMENT

WATERVIEW GOLF CLUB
Rowlett, Texas

This Lease Agreement ("Lease") is entered into this 1st day of September, 1999, by and between CITY OF ROWLETT, TEXAS, a municipal corporation ("Lessor"), and AMERICAN GOLF CORPORATION, a California corporation ("Lessee").

1. LEASED PREMISES. Lessor hereby leases to Lessee and Lessee hereby leases from Lessor, for the term and upon the terms and conditions set forth in this Lease, the following (collectively, "Leased Premises"):

1.1 Real Property. Lessor's fee interest in that parcel of land commonly known as Waterview Golf Club, Rowlett, Texas and described with more specificity in Exhibit "A," which is attached to this Lease and made a part of this Lease for all purposes, together with all buildings, fixtures and other improvements located on said land and all easements, covenants and other appurtenant rights (the "Real Property").

1.2 Personal Property. All equipment, furnishings, machinery, vehicles and other personal property utilized in the operation of the Leased Premises, including that personal property described in Exhibit "B", which is attached to this Lease and made a part of this Lease for all purposes (the "Personal Property").

1.3 Water Rights. All of Lessor's rights and interests under the Water Documents (as defined in Section 20.13 below).

2. [Intentionally deleted.]

3. USE OF LEASED PREMISES.

3.1 Use. Lessee shall use the Leased Premises for the operation of a high-end daily fee golf course and other activities customarily associated with or incidental to the operation of a high-end daily fee golf course, including without limitation, sale or rental of golf-related merchandise at a golf professional's shop, furnishing of lessons by a golf professional, operation of a driving range, and sales of food and beverages. Lessee shall not use the Leased Premises for any unlawful purpose and shall comply

with all valid laws, rules and regulations applicable to the Leased Premises or the businesses conducted on the Leased Premises.

3.2 Lessee's Right to Control Business Operations. Subject to the terms of this Lease, Lessee shall have the exclusive right and authority to operate and manage the Leased Premises as Lessee deems appropriate. Without limiting the foregoing, (a) Lessee shall have the right to implement all policies and procedures and to perform any act deemed necessary or desirable for the operation and management of the Leased Premises; (b) Lessee shall have the right to determine all green fees, cart fees, driving range fees and all other charges associated with the operation of the Leased Premises, provided that such charges shall be competitive with those at the Comparable Golf Courses (as defined in Article 14 below); (c) Lessee shall have the right to determine all personnel requirements, recruitment schedules and compensation levels and shall employ, train, promote, discharge and supervise all personnel performing services in and about the Leased Premises; and (d) Lessee shall have the right, in Lessee's reasonable discretion, to approve the projected date that the golf course at the Leased Premises will open for business to the public, and to determine the actual date that such golf course opens for business to the public, which date shall be not more than thirty (30) days after the golf course has been completed (as determined in accordance with the provisions of Section 13.1 below). Notwithstanding the foregoing, the name of the golf course located on the Leased Premises shall be "Waterview Golf Club," which name shall not be changed without the prior written consent of Lessor and Lessee. In connection with Lessee's operation and management of the Leased Premises, Lessee shall, on or before January 31 of each Lease Year, submit to Lessor an annual sales and marketing plan for the Leased Premises, provided, however, while Lessor shall have the right to comment upon and make suggestions with respect to said plan, Lessee shall not be obligated to implement the same.

3.3 Limitation on Lessee's Right to Control Business Operations. Notwithstanding any provision of Section 3.2 to the contrary, Lessee's rights under Section 3.2 shall be subject to the following:

3.3(a) Resident Discount. Residents of the City of Rowlett shall be entitled to a fifteen percent (15%) discount off the published price green fees from time-to-time established by Lessee at the Leased Premises. In addition, at such times that Lessee requires mandatory use of golf carts at the Leased Premises,

residents of the City of Rowlett shall be entitled to a fifteen percent (15%) discount off the published price golf cart rental fees from time-to-time established by Lessee at the Leased Premises.

3.3(b) Competent Management, Management Qualifications. During the Lease term, Lessee shall provide competent management of the Leased Premises. For the purposes of this paragraph, "competent management" shall mean demonstrated ability in the management and operation of a golf course and related activities in a manner consistent to those standards adhered to at the Comparable Golf Courses (as defined in Section 14 below). Lessee, as an Operating Expense (as defined in Section 7.4 below) and in addition to other personnel required hereby, shall obtain the services of a full time, on-site, competent general manager to manage the overall facility at the Leased Premises, and a full time, on-site golf course superintendent to supervise grounds maintenance activities.

3.3(c) Public Use. Lessee shall maintain the Leased Premises as a public golf course. Subject to the immediately succeeding sentence, the general public shall not be wholly or permanently excluded from any portion of the Leased Premises, except during non-business hours. Notwithstanding the foregoing, Lessee may schedule tournaments and may develop reasonable restrictions for the use of the Leased Premises, provided they do not materially diminish the availability of the golf course to the general public, and are consistent with use of the Leased Premises for the purposes specified herein.

3.3(d) Disorderly Persons. Lessee agrees to promptly remove from the Leased Premises any unreasonably loud, boisterous or disorderly persons.

3.3(e) Illegal Activities. Lessee shall not knowingly permit any illegal activities to be conducted upon the Leased Premises.

3.3(f) Signs. Lessee shall not post free-standing signs upon the Leased Premises or improvements thereon which are not related to the Leased Premises, unless the prior written approval therefor is obtained from Lessor, which approval Lessor shall not unreasonably withhold or delay.

3.3(g) Lessee's Staff. Lessee shall maintain an adequate and proper staff and discharge any employee whose conduct or activity shall, in the reasonable exercise of Lessee's discretion, be deemed to be detrimental to the interests of the public patronizing the Leased Premises. Lessee shall establish an identification system for personnel assigned to the starter service and golf shop which clearly indicates to golf course patrons that the person(s) on duty are employed by Lessee for various aspects of the golf course operations. The identification system shall be furnished as an Operating Expense and shall include appropriate attire, name badges and/or name plates.

3.3(h) Sanitation. Lessee shall not permit any offensive matter or refuse or substance that constitutes an unnecessary, unreasonable or unlawful fire hazard, or that is detrimental to the public health to remain on the Leased Premises, and Lessee shall prevent any accumulation thereof from occurring.

3.3(i) Safety. Lessee shall take steps as are reasonably necessary to keep the Leased Premises in a reasonably safe condition. Lessee shall obtain emergency medical care for any member of the public Lessee knows is in need thereof, because of illness or injury occurring on the Leased Premises. Lessee shall cooperate fully with Lessor in the investigation of any accidental injury or death occurring on the Leased Premises, including a prompt report thereof to the City Manager.

3.3(j) Habitation. The Leased Premises shall not be used for human habitation; provided, however, that person(s), if any, providing night watch or patrol services shall be permitted on the Leased Premises after business hours.

3.3(k) Golf Clubs/Organizations. Lessee acknowledges that there is a benefit to the operation of the Leased Premises to having responsible golfing organizations. Without granting any special privileges to any person or group, Lessee may encourage, create and accommodate organizations, including without limitation, senior citizens and a general non-discriminatory golf club organization.

3.3(l) Golf Instruction. Lessee shall promote golf instruction and a junior golf program by providing group lessons, private lessons, golf clinics, golf schools, golf camps, range balls, general golf instruction, actual play and junior tournaments. Such programs shall be taught by Lessee's golf

professionals and publicity for same shall be coordinated in cooperation with the City's Parks and Recreation Department. Golf shall be taught only by qualified instructors.

3.3(m) Professional Shop Inventory, Merchandise and Equipment. Lessee shall display and maintain a professional shop inventory comparable to the Comparable Golf Courses. The inventory shall include golfing equipment, supplies and apparel which shall be offered for sale to the public and, in particular, to patrons of the golf course at prices reasonable and comparable to prices being paid for equipment, supplies, and apparel in the Comparable Golf Courses.

3.3(n) Ambassadors. Lessee, as an Operating Expense, shall furnish such personnel as may be required to expedite the play of golfers without substantial delay.

3.3(o) Golf Carts. Lessee shall provide, as an Operating Expense, a sufficient number of power driven golf carts and manually operated golf carts to meet the reasonably expected public demand therefor at the Leased Premises.

3.3(p) Dress and Conduct Standards. Lessee shall set dress and conduct standards consistent with those imposed at the Comparable Golf Courses, and shall deny entry or permission to play to anyone who fails to conform to those standards. Lessee shall have the right to refuse admission and/or service to persons who are drunk, disorderly, under the influence of drugs, or who conduct themselves in a manner that could result in injury or harm to persons or property on the Leased Premises.

3.3(q) Tournaments. Lessor shall have the right two times during each Lease Year to schedule a tournament or tournaments for the full day. Lessee and Lessor will agree in advance, once a year, on the dates for such tournaments, it being understood and agreed that such tournaments shall be scheduled at least one hundred eighty (180) days in advance. Tournament participants will pay the then-prevailing rates for golf tournament fees and services.

3.3(r) Charity Tournament. Lessor shall have the right to annually schedule and conduct a tournament at no charge for green fees or golf cart rentals which shall be for the purpose of raising money for charities of the City of Rowlett as selected by the City of Rowlett. Lessee and Lessor will agree in advance on

the date for such tournament, it being understood and agreed that such tournament shall be scheduled at least one hundred eighty (180) days in advance. Such tournament shall not be scheduled during weekend playing times.

3.3(s) Inspections. For purposes of inspecting the Leased Premises and the operations and performance of Lessee hereunder, Lessor and its representatives, subject to the express prior approval of the City Manager of the City of Rowlett, shall have the right, subject to tee-time availability and Lessee's standard reservation policy from time-to-time in effect, to play up to forty (40) rounds of golf per month at the Leased Premises without charge for green fees or golf carts, no more than twelve (12) of such rounds to be played on the weekends. Any inspection pursuant to this Section 3.3(s) shall be for the sole purpose of protecting property owned by Lessor, and shall not be construed as a representation by Lessor that the Leased Premises is being properly operated and managed, or as a waiver of any right Lessor may have against Lessee for noncompliance with the terms, provisions, and conditions of this Lease. Lessor may communicate to Lessee the results of any inspection conducted by Lessor pursuant to this Section 3.3(s). In addition, Graham-Panks, who is Lessor's architect for the Leased Premises, shall have the right, subject to tee-time availability and Lessee's standard reservation policy from time-to-time in effect, during the first ten (10) years after the Commencement Date, to have its employees and business invitees accompanying such employees play forty (40) rounds of golf per calendar year at the Leased Premises without charge for green fees. Any rounds of golf permitted to be played under this Section 3.3(s) without charge which are not played within the time periods described herein may not be carried forward or backward into any other time period. The rights described in this Section 3.3(s) are not assignable, except that Lessor may allocate the right to use up to sixteen (16) of its forty (40) rounds of golf per month to the developer of the Development Parcel (as defined in Article 27 below).

3.3(t) Rowlett High Golf Team. Lessee shall work in good faith with the school district with jurisdiction over Rowlett High School to develop a plan for use by the Rowlett High School golf team of the golf course on the Leased Premises for practices and match play.

3.3(u) Initial Fairway Cuts. Lessee shall, at no expense to Lessee, consult with Gary Stephenson regarding the initial fairway cuts on the golf course at the Leased Premises.

4. TERM.

4.1 Term. The initial term of this Lease ("Initial Term") shall be for approximately thirty (30) years, beginning on the earlier of (a) that date which is seven (7) days after Lessor's Work at the Leased Premises has been completed (as determined in accordance with the provisions of Section 13.1 below), or (b) the date Lessee has opened the golf course at the Leased Premises for business to the public (the "Commencement Date"), and ending on December 31 of the calendar year which is thirty (30) full Lease Years (as defined in Section 5 below) thereafter (the "Term"). Within thirty (30) days after the Commencement Date, Lessor and Lessee shall execute a Commencement Date confirmation notice in the form of Exhibit "C" hereto confirming the first and last days of the Term; provided, however, the failure to do so shall not affect the parties' obligations under this Lease. Notwithstanding anything in this Lease to the contrary, if the Commencement Date has not occurred by September 1, 2000 due to the fact that Lessor's Work has not been completed, as reasonably determined by Lessee, then Lessee shall have the right to terminate this Lease upon prior written notice to Lessor at any time thereafter. In the event of any such termination, the parties shall have no further rights or obligations hereunder except that Lessor shall, within thirty (30) days after receiving said notice, refund to Lessee any prepaid rent and other amounts previously paid by Lessee to Lessor in connection with this Lease.

4.2 Option to Extend by Lessee. Lessee shall have the right and option to extend the term of this Lease at the end of the Initial Term and the first Option Period (as defined below) under all of the terms, covenants and conditions contained in this Lease for two (2) successive five (5) year option periods ("Option Periods"). The right to exercise such options is dependent upon Lessee not being in material default under this Lease (after the expiration of any applicable cure periods) on the date the applicable Option Period is to commence. Lessee must give Lessor written notice of its intention to exercise an option not less than one hundred eighty (180) days prior to the end of the Initial Term or the first Option Period, as applicable.

4.3 Surrender Upon Lease Expiration. Upon the expiration or earlier termination of this Lease, Lessee shall return the Real Property and Personal Property to Lessor in the condition in which Lessee is required to maintain the same under this Lease, free and clear of liens and encumbrances created by Lessee.

5. LEASE YEAR DEFINED. The term "Lease Year" means each full calendar year during the Term. The period commencing on the first day of the Term and ending on December 31 next following such date is herein referred to as the "Partial Year." The Lease Year may be changed by written agreement of the parties. The Partial Year and each Lease Year will constitute a separate accounting period for the purpose of computing Lessor Debt Deficit and Participation Rent (each as defined below). Subject to Section 6.3 below, Gross Revenue and Net Operating Income (as each defined herein) for the Partial Year and any Lease Year shall not be carried forward or backward into any other Lease Year. If this Lease expires or is terminated prior to the end of a Lease Year, Minimum Rent, Lessor Debt Deficit and Participation Rent shall be subject to proration.

6. RENT; SECURITY DEPOSIT. In consideration of Lessor executing this Lease and granting the rights provided in this Lease, Lessee shall pay to Lessor at the address listed for Lessor in Section 26.6 of this Lease the minimum rent payments and additional rent payments set forth below.

6.1 Minimum Rent. During the term of this Lease, Lessee shall pay to Lessor a minimum rent ("Minimum Rent") in the amounts set forth in Section 6.1(a) and Section 6.1(b) below.

6.1(a) Fixed Minimum Rent. During the term of this Lease (other than Lease Years 28-30 and the Option Periods), Lessee shall pay to Lessor Minimum Rent in an amount equal to the payments set forth on Schedule 6.1(a) attached hereto. The Minimum Rent described in this Section 6.1(a) shall be paid in semi-annual installments on February 10th and August 10th of each calendar year of the term of this Lease.

6.1(b) Additional Minimum Rent. In addition to the Minimum Rent set forth in Section 6.1(a) above, subject to reduction in accordance with the terms hereof, Lessee shall pay to Lessor additional Minimum Rent ("Additional Minimum Rent") equal to the lesser of (i) the amounts set forth in the column captioned

"Interest" on the schedule of Combination Tax and Limited Surplus Revenue Certificates of Obligation Taxable Series 1999B bonds ("Series 1999B New Money Bonds") attached hereto as Schedule 6.1(b); or (ii) the interest payable by Lessor under the Series 1999B New Money Bonds following the prepayment or deemed prepayment of principal thereunder. Lessor and Lessee hereby agree that (i) public improvement district assessments received from time to time by Lessor with respect to the Series 1999B New Money Bonds shall be deemed to be applied to the prepayment of principal on the Series 1999B New Money Bonds on the earliest practicable date that the authorizing documents of such Series 1999B New Money Bonds permit prepayment; and (ii) for purposes of this Section 6.1(b), such public improvement district assessments shall equal not less than, and shall be deemed to equal at least, Three Hundred and One Dollars ($301) for each building permit issued with respect to a lot on the Development Parcel (as defined in Section 27 below). Upon the prepayment or deemed prepayment of principal under the Series 1999B New Money Bonds (including, without limitation, following Lessor's receipt or deemed receipt of public improvement district assessments), the Additional Minimum Rent shall be recalculated in order to determine, for purposes of this Section 6.1(b), the interest payable by Lessor under the Series 1999B New Money Bonds taking into account the prepayments and deemed prepayments of principal. Promptly after Lessee's request therefor, Lessor shall furnish to Lessee such information as Lessee may reasonably request relating to the Series 1999B New Money Bonds and/or the public improvement district assessments described herein. The Additional Minimum Rent shall be paid semi-annually on February 10th and August 10th of each calendar year of the term of this Lease. Lessor hereby acknowledges and agrees that Lessee shall not be responsible for any payments of principal in connection with the Series 1999B New Money Bonds, including, without limitation, the $500,000 balloon payment of principal scheduled to be made by Lessor on August 15, 2013.

6.1(c) <u>Lease Years 28-30 and Option Periods</u>. Notwithstanding any provision of Sections 6.1(a) or 6.1(b) to the contrary, in Lease Years 28-30 and the Option Periods (as applicable), Lessee shall pay to Lessor Minimum Rent in accordance with the following schedule:

Lease Year	Minimum Rent
Lease Years 28-30 (calendar years 2027-2029)	In each Lease Year, the greater of (i) the Minimum Rent required to be paid by Lessee in Lease Year 27; or (ii) seventy-five percent (75%) of the quotient obtained by dividing three (3) into the Minimum Rent and Participation Rent required to be paid by Lessee in the three (3) Lease Years immediately preceding the Lease Year for which Minimum Rent is being determined
Option Periods (calendar years 2030-2039)	In each Lease Year, the Minimum Rent shall equal the Minimum Rent required to be paid by Lessee in Lease Year 30

6.1(d) Date References. Lessor and Lessee hereby (i) acknowledge that the references to calendar years in the schedules set forth in Schedules 6.1(a) and 6.1(b) attached hereto and in Section 6.1(c) above are based upon the assumption that the Commencement Date will occur in the calendar year 1999, and (ii) agree that the references to such calendar years in such schedules shall automatically be appropriately changed if the Commencement Date occurs in a calendar year other than 1999.

6.2 Lessor Debt Deficit; Participation Rent. As provided in Article 8 below, in addition to the payment of Minimum Rent, in the Partial Year and each Lease Year, Lessee shall pay to Lessor a portion of the NOI generated at the Leased Premises equal to the Lessor Debt Deficit (as defined in Section 6.6 below) and the "Participation Rent" calculated pursuant to this Section 6.2, as indicated in the following schedule:

(a) Partial Year and Lease Years 1 through 19 (calendar years 1999-2018)	(i) Base Line NOI shall be retained in full by Lessee; (ii) NOI exceeding Base Line NOI up to the Lessor Debt Deficit shall be paid to Lessor; and (iii) NOI exceeding the sum of (A) Base Line NOI, (B) amounts credited to the capital improvement fund ledger pursuant to Section 13.3, and (C) the Lessor Debt Deficit shall be payable ten percent (10%) to Lessor as Participation Rent.

b) Lease Years 20 through 30, (calendar years 2019-2029)	(i) Base Line NOI shall be retained in full by Lessee; (ii) NOI exceeding Base Line NOI up to the Lessor Debt Deficit shall be paid to Lessor; (iii) NOI exceeding (A) the sum of Base Line NOI, (B) amounts credited to the capital improvement fund ledger pursuant to Section 13.3 below, and (C) the Lessor Debt Deficit up to an excess of $300,000, shall be payable thirty percent (30%) to Lessor as Participation Rent; (iv) NOI exceeding the sum of (A) Base Line NOI, (B) amounts credited to the capital improvement fund ledger pursuant to Section 13.3 below, (C) the Lessor Debt Deficit, and (D) $300,000, up to an excess of $300,000 over the sum of (A), (B), (C) and (D), shall be payable forty percent (40%) to Lessor as Participation Rent; and (v) NOI exceeding the sum of (A) Base Line NOI, (B) amounts credited to the capital improvement fund ledger pursuant to Section 13.3 below, (C) the Lessor Debt Deficit, and (D) $600,000 shall be payable fifty percent (50%) to Lessor as Participation Rent.

c) Option Periods (calendar years 2030-2039)	(i) Base Line NOI shall be retained in full by Lessee; and (ii) NOI exceeding the sum of Base Line NOI and the amounts credited to the capital improvement fund ledger pursuant to Section 13.3 below shall be payable fifty percent (50%) to Lessor as Participation Rent

6.3 Recovery of Net Operating Income.

6.3(a) If, in any Lease Year, the operations at the Leased Premises do not generate Net Operating Income equal to or exceeding the Base Line NOI, then Lessee shall be entitled to receive payments from the first available Net Operating Income thereafter generated at the Leased Premises, in an amount, in each Lease Year, necessary to recoup the difference between the Base Line NOI for such Lease Year and the actual NOI generated in such Lease Year (said difference being referred to herein as the "NOI Shortfall"). The amount of the NOI Shortfall shall, for purposes of this Lease and determination of Net Operating Income in future Lease Years, be paid to Lessee prior to any other distribution of NOI to Lessor or Lessee, and shall be considered an Operating Expense in the Lease Year(s) paid.

6.3(b) To the extent that the actual Net Operating Income in more than one Lease Year during the term of this Lease is less than the Base Line NOI for the relevant Lease Years, then the provisions of this Section 6.3 shall apply cumulatively with respect to each such Lease Year. For example, if there is an NOI Shortfall of $50,000 in the first Lease Year, then the $50,000 NOI Shortfall shall be considered an Operating Expense until the full amount has been recovered. If, with respect to a subsequent Lease Year, after factoring in the $50,000 shortfall in the first Lease Year, there is an NOI Shortfall in the subsequent Lease Year, then the shortfall relating to the subsequent Lease Year shall also become an Operating Expense and treated in a like manner.

6.4 Offsets. The rental payments to Lessor under this Article 6 shall not be subject to set-off, counterclaim, abatement,

suspension, deduction, diminution or defense, except as otherwise expressly provided in this Lease.

6.5 Security Deposit. Within ten (10) days after the Commencement Date, Lessee shall deposit with Lessor a Security Deposit (as defined below) in an amount equal to the Minimum Rent required to be paid by Lessee in the one-year period after the Commencement Date. Lessor may apply all or part of the Security Deposit to any Minimum Rent or other charges not paid by Lessee when required by this Lease after the expiration of any applicable cure period. If Lessor uses any part of the Security Deposit, then Lessee shall restore the same to its full amount within ten (10) days after Lessor's written request therefor. No interest shall be paid on the Security Deposit. As used herein, the term "Security Deposit" means, at Lessee's election, cash, a letter of credit, and/or a performance bond or other security reasonably acceptable to Lessor. If Lessee elects to deliver the Security Deposit to Lessor in the form of a letter of credit, then the same shall be an irrevocable standby letter of credit which provides for payment by the issuer thereof upon demand and upon Lessor's delivery to the issuer of a written notice in which Lessor certifies (a) that Lessor is entitled to use the Security Deposit, or portion thereof, as provided herein, and (b) the amount of the Security Deposit Lessor is so entitled to use. Notwithstanding any provision of this Section 6.5 to the contrary, upon that date which is three (3) years after the Commencement Date, (i) Lessor shall return to Lessee the Security Deposit then held by Lessor, and (ii) Lessee shall have no further obligation to deliver to Lessor, and Lessor shall have no further right to hold or receive from Lessee, any security deposit.

6.6 Debt Deficit. If, in the Partial Year or any Lease Year, the fixed Minimum Rent payments required to be paid by Lessee pursuant to Section 6.1(a) above are less than the sum of the following annual payments (each, a "Fixed Rate Bond Payment"): (i) the amounts set forth in the column captioned "Total P&I" on the schedule of Combination Tax and Limited Surplus Revenue Certificate of Obligation Taxable Series 1999A bonds ("Series 1999A Bonds") attached hereto as Schedule 6.6, plus (ii) the amounts set forth in the column captioned "Total" on the Schedule of General Obligation Bonds Taxable Series 1997A ("Series 1997A Bonds") attached hereto as Schedule 6.6, then the difference obtained by subtracting the fixed Minimum Rent required to be paid by Lessee pursuant to Section 6.1(a) above from the Fixed Rate Bond Payment for the Partial Year and each Lease Year shall constitute the "Debt

Deficit" for purposes of this Lease. Lessee shall pay, in addition to and together with the payment of Minimum Rent, all Debt Deficit up to a cumulative total during the Lease Term of Six Hundred Thousand Dollars ($600,000). Once Lessee has made payments totalling Six Hundred Thousand Dollars ($600,000), then thereafter, for the remainder of the Term, Lessor shall pay all remaining Debt Deficit (said portion paid by Lessor in a particular Lease Year being referred to herein as the "Lessor Debt Deficit"). Lessor shall be entitled to recoup some or all of the Lessor Debt Deficit pursuant to the provisions of Section 6.2 above. If, in the Partial Year or any Lease Year, the amount by which NOI exceeds Base Line NOI does not equal or exceed the Lessor Debt Deficit, then the Lessor Debt Service not required to be paid to Lessor, in whole or in part, pursuant to Section 6.2 above shall not be carried forward or backward into the Partial Year or any Lease Year. Promptly after Lessee's request therefor, Lessor shall furnish to Lessee such information as Lessee may reasonably request relating to the Series 1999A Bonds and/or the Series 1997A Bonds. Promptly after the written request of either Lessor or Lessee, Lessor and Lessee shall enter into an amendment of this Lease which confirms the exact amount of Lessor Debt Deficit for the Partial Year and each Lease Year.

7. DEFINITIONS RELATING TO PAYMENT OF RENT.

7.1 Base Line NOI. The term "Base Line NOI", with respect to the Partial Year and each Lease Year, means the amount of Net Operating Income corresponding to the Partial Year and each Lease Year as set forth below:

Lease Year	Base Line NOI
Partial Year (Commencement Date through December 31, 1999)	$200,000 multiplied by the quotient obtained by dividing twelve (12) into the number of months in the Partial Year
Lease Year 1 (calendar year 2000)	$200,000
Lease Year 2 (calendar year 2001)	$225,000
Lease Year 3 (calendar year 2002)	$275,000
Lease Years 4-5 (calendar years 2003-2004)	$300,000 per Lease Year
Lease Years 6-30 (calendar years 2005-2029)	In each Lease Year, the Base Line NOI for the preceding Lease Year, subject to increase in accordance with the increase in the CPI as set forth below
Option Periods (calendar years 2030-2039)	In each Lease Year, the Base Line NOI shall equal the Minimum Rent required to be paid by Lessee in such Lease Year pursuant to Section 6.1(c) above

Beginning with Lease Year 6, and continuing each Lease Year thereafter through the end of the Initial Term, the Base Line NOI shall be increased from the Base Line NOI for the previous Lease Year by the percentage increase in the CPI (as defined below) in the twelve (12) month period ending on the last day of October in the immediately preceding Lease Year; provided, however, that in no event shall Base Line NOI be reduced by reason of such computation. As used herein, the term "CPI" means the United States Department of Labor, Bureau of Labor Statistics, Consumer Price Index for All Urban Consumers (all items for the geographical statistical area in which the Leased Premises are located on the basis of 1982-1984=100. If the format or components of the CPI are materially changed after the date hereof, then Lessee shall substitute an index which is published by the Bureau of Labor Statistics or

similar agency and which is most nearly equivalent to the CPI in effect as of the date hereof. The substitute index shall be used to calculate the increase in the Base Line NOI unless Lessor objects to such index in writing within fifteen (15) days after the date Lessee notifies Lessor of Lessee's substitute index. If Lessor objects to the substitute index, then Lessee and Lessor shall, before litigating such dispute, submit the selection of the substitute index to a neutral mediator reasonably acceptable to Lessor and Lessee for non-binding mediation, provided that if Lesser and Lessee are unable to agree on a mediator within thirty (30) days after Lessor or Lessee requests mediation, then Lessor and Lessee shall not be required to mediate such dispute. The costs of any mediation shall be borne equally by Lessor and Lessee. Lessor and Lessee hereby (i) acknowledge that the references to calendar years in the schedule set forth above are based upon the assumption that the Commencement Date will occur in the calendar year 1999, and (ii) agree that the references to such calendar years in such schedule shall automatically be appropriately changed if the Commencement Date occurs in a calendar year other than 1999.

7.2 Gross Revenue. The term "Gross Revenue" means (i) all money received by Lessee and by licensees and concessionaires which are Affiliated Licensees (as defined below) as a result of the sales of goods or the provision of services on the Leased Premises, and (ii) all concession and license fees received by Lessee from any person or entity other than an Affiliated Licensee which are derived solely from the Leased Premises, (it being understood and agreed that Lessee shall not divert any of such money which ordinarily would be received by Lessee on the Leased Premises), but shall not include:

(1) Cash refunds or credits allowed on returns by customers;

(2) Sales taxes, excise taxes, gross receipts taxes, admissions taxes, use taxes and other similar taxes now or later imposed upon the sale of food, beverages, merchandise or services and paid by Lessee or any Affiliated Licensee to the appropriate taxing authority, whether added to or included in the selling price;

(3) Fees charged for golf lessons and instruction to the extent that such fees or any portion thereof are retained by the golf professionals giving lessons or instruction (including both instances where the fees, or portions thereof, are paid

directly to the golf professionals and where the golf professionals receive bonuses or commissions based on the fees received from lessons or instruction);

(4) The actual uncollectible amount of any check or bank draft received by Lessee or any Affiliated Licensee as payment for goods or services and returned to Lessee or any Affiliated Licensee from a customer's bank as being uncollectible (commonly "non-sufficient funds" checks);

(5) The actual uncollectible amount of any charge or credit account (commonly "bad debts") incurred by Lessee or any Affiliated Licensee for the sale of merchandise or services;

(6) The actual uncollectible amount of any sale of merchandise or services for which Lessee or any Affiliated Licensee accepted a credit card;

(7) Interest or other charges paid by customers for extension of credit;

(8) Sales made by any concessionaire or licensee of Lessee which is not an Affiliated Licensee, it being the intention of this Lease that only concession and license fees actually received by Lessee from such unaffiliated concessionaires and licensees are to be included in the calculation of Lessee's gross revenue;

(9) Sales or trade-ins of machinery, vehicles, trade fixtures or personal property owned by Lessee or any affiliate of Lessee (including, without limitation, any Affiliated Licensee);

(10) The value of any merchandise, supplies or equipment exchanged or transferred from or to other locations of business of Lessee or any Affiliated Licensee where such exchange or transfer is not made for the purpose of (or does not have the practical effect of) avoiding a sale which would otherwise be made from or at the Leased Premises;

(11) Receipts in the form of refunds from or the value of merchandise, supplies or equipment returned to shippers, suppliers or manufacturers;

(12) The amount of any cash or quantity discounts or rebates received from sellers, suppliers or manufacturers;

(13) The amount of any gratuities paid or given by customers to or for employees of Lessee or any Affiliated Licensee;

(14) Receipts from the sales of uniforms or clothing required to be worn by bona fide employees;

(15) Amounts attributed to free meals served or provided to employees of Lessee or any Affiliated Licensee, and amounts attributed to meals served or provided to employees of Lessee or any Affiliated Licensee at a discount, in which event the discounted portion shall not be included in Gross Revenue;

(16) The discounted portion of any sales of merchandise discounted to employees;

(17) Receipts by any person or entity other than Lessee or an Affiliated Licensee (including, without limitation, receipts by Lessee's employees) from the sale of waste or scrap materials resulting from Lessee's operations;

(18) Fees attributable to membership in the American Golf Club or the American Golf Players' Association (or any similar national or regional program implemented by Lessee), a program that allows members the right to play a limited number of rounds at discounted green fee and cart fee rates, to use the driving range, if any, at a discounted rate, and to receive limited food and beverage and merchandise discounts (provided, however, that such discounted green fees, cart fees, food, beverage and merchandise shall be included as part of Gross Revenue); and

(19) The amount of any cash received from Lessee's operation of an advance reservation system, except to the extent the same is applied to green fees, cart fees or driving range fees at the Leased Premises.

As used herein, the term "Affiliated Licensees" means licensees and concessionaires which control, are controlled by or are under common control with Lessee.

7.3 Net Operating Income and NOI. The terms "Net Operating Income" and "NOI" mean Gross Revenue minus Operating Expenses.

7.4 Operating Expenses. The term "Operating Expenses" as used herein means all costs and expenses of every kind and nature paid by Lessee in operating, equipping, insuring, repairing, replacing and maintaining the Leased Premises. Such costs and expenses shall include without duplication, but not be limited to, start-up expenses directly attributable to the Leased Premises not to exceed $50,000 incurred by Lessee prior to the Commencement Date, golf course maintenance and repair costs (including, without limitation, major repair costs), utilities, insurance premiums, commercially reasonable charges billed by Lessee for self-insurance and/or self-assumption amounts established by Lessee in accordance with Section 16.2 below (which charges shall be paid directly to Lessee out of Gross Revenue), costs of purchasing operating inventory, compensation and expenses of the on-site management staff and other employees directly employed at the Leased Premises, an amount equal to four percent (4%) of Gross Revenues to cover Lessee's expenses (including costs for Lessee's executive, accounting and supervisory personnel), advertising and promotions, real and personal property taxes (including any regular annual increases thereto), assessments against the Leased Premises, the scheduled Minimum Rent set forth in Section 6.1(a) and 6.1(b) above, without taking into account any reductions or abatements in, or credits or offsets against, the same permitted under this Lease or otherwise, all NOI Shortfall paid to Lessee pursuant to Section 6.3 above, legal fees and costs, uninsured losses, payments of deductible amounts with regard to insurance policies maintained with third party insurers (to the extent Lessee does not elect to self-insure the deductible amount and charge Lessor therefor pursuant to the provisions hereof), costs and expenses related to compliance with orders or directives of government agencies, capital reserves which Lessee deems necessary or desirable (including, without limitation, those described in Section 13.3 below), capital improvements and replacements made at the Leased Premises amortized over the useful life of such improvements (but only to the extent not previously included as an Operating Expense due to its inclusion in the capital improvement reserve), and any interest on funds borrowed by Lessee for equipment, improvements or any other aspect of the operation of the Leased Premises.

8. REPORTING AND PAYMENT OF LESSOR DEBT DEFICIT AND PARTICIPATION RENT. Within ninety (90) days after the end of each

Lease Year, Lessee shall prepare and deliver or cause to be prepared and delivered to Lessor an annual financial statement for the Leased Premises certified to be correct by Lessee and prepared by a certified public accountant in accordance with consistent practices governing cash receipts, which shall at a minimum contain (i) a statement of the Gross Revenue, Operating Expenses and Net Operating Income for the preceding Lease Year; and (ii) a computation of Lessor Debt Deficit and Participation Rent for the preceding Lease Year. Within ninety (90) days after the end of each Lease Year, Lessee shall also deliver to Lessor a remittance, if appropriate, of the amount of Lessor Debt Deficit and Participation Rent payable by Lessee to Lessor.

9. MAINTENANCE AND EXAMINATION OF RECORDS; AUDIT; CONFIDENTIALITY; REMITTANCE OF UNDERPAYMENT; FAILURE TO FURNISH ACCOUNTING STATEMENT.

9.1 Maintenance and Examination of Records. Lessee shall maintain, at its principal offices, its financial records, books, accounts, sales tax reports and other data reflecting Lessee's business transactions conducted in, on or from the Leased Premises, all for a period of three (3) years after the conclusion of any Lease Year. Such books and records shall include a daily record of Gross Revenue, and shall categorize Gross Revenue by type of function from which derived. Lessee shall maintain a method of accounting practice which shall correctly and accurately reflect Gross Revenue and Operating Expenses. The accounting for the Leased Premises, including bank accounts established for Lessee's business conducted on the Leased Premises, shall be separate from the accounting for any other business operated by Lessee, and from the accounting for any other entity including, without limitation, any parent company, wholly-owned subsidiary or affiliate of Lessee. The method of accounting for the Leased Premises shall include the keeping of the following documents:

(1) Regular books of accounting such as general ledgers; and

(2) Cash receipts, and sales and purchase journals, including any supporting and underlying documents such as vouchers, checks, tickets and bank statements.

Lessee shall record all transactions on a cash register, computer or other similar equipment utilized in respect to the recordation of financial information. Cash registers or computers or such

other equipment shall be non-resettable and sufficient to supply an accurate recording of all sales on tape. Lessee shall not replace an existing cash register or purchase or install an additional cash register before obtaining Lessor's approval of the specific register to be purchased, which approval Lessor shall not unreasonably withhold or delay. Lessee shall record or cause to be recorded on the cash registers every cash sale or other transaction by Lessee occurring at the Leased Premises. Receipts shall be issued to every customer for every sale or rental by Lessee.

9.2 Audit. All financial records, books, accounts, sales tax reports and other data described in Section 9.1 above shall, upon at least three (3) business days' prior written request from Lessor to Lessee, be open and available to Lessor or Lessor's representative for an examination or audit at all reasonable times during business hours. Lessor shall be entitled at any time within three (3) years after the conclusion of the Partial Year or a Lease Year to question the sufficiency of any rent payments or the accuracy of the report furnished by Lessee. Lessee shall cooperate fully with Lessor's representatives in the conduct of any examination or audit pursuant to this Section 9.2, which cooperation shall include making the data described in Section 9.1 above available at or near the Leased Premises within a reasonable time after Lessor's written request therefor. If Lessee underpays the sum of Lessor Debt Deficit and Participation Rent in any Lease Year by more than five percent (5%), then Lessee shall pay the reasonable, out-of-pocket cost of any audit of Lessee's books and records conducted by Lessor which revealed such underpayment.

9.3 Confidentiality. Except for disclosure to Lessor's attorneys and accountants or as may be necessary or appropriate in any legal proceedings, all information obtained by Lessor pursuant to this Article 9 shall be received and maintained in confidence and shall not be disclosed to anyone not directly connected with the official business of Lessor, unless a written open records request has been made and the Texas Attorney General's office determines that it must be disclosed under the Texas Open Records Act.

9.4 Remittance of Underpayment. If, at any time during the Lease term, Lessee pays Lessor less than all of the Lessor Debt Deficit and/or Participation Rent due and payable to Lessor, then, immediately after the discovery of any such underpayment, Lessee shall pay the shortage to Lessor, together with interest on the

shortage of Lessor Debt Deficit and Participation Rent in accordance with the provisions of Section 23.2(e) below.

9.5 Failure to Furnish Accounting Statements. If Lessee shall fail to prepare and deliver or cause to be prepared and delivered any statements required to be delivered by Lessee under this Article 9 and such failure shall continue beyond the cure period set forth in Section 23.1(b) below, then Lessor may cause an audit to be made of all books, records and accounts of business operations conducted in, on or from the Leased Premises by Lessee for such delinquent accounting period and may prepare the statement or statements which Lessee failed to prepare and deliver. Said audit or audits shall be in addition to the audit provided for in Section 9.2, and Lessee shall pay on demand all reasonable, out-of-pocket expenses of any audit and the preparation of any statements contemplated by this Section 9.5, together with interest thereon in accordance with Section 23.2(b) below from the date of the Lessor's demand until paid.

10. TAXES.

10.1 Real Property Taxes. Lessee shall pay directly to the appropriate taxing authorities, prior to delinquency (except in the case of contests of real estate taxes made in good faith), the Real Property Taxes (as defined in Section 10.2 below), if any, assessed against the Leased Premises, provided that (i) Lessee shall receive a credit against the Minimum Rent, Lessor Debt Deficit and/or Participation Rent next payable under this Lease equal to the Real Property Taxes paid by Lessee; and (ii) if, upon the expiration or sooner termination of this Lease, Lessee has not received full credit against Minimum Rent, Lessor Debt Deficit and/or Participation Rent for the Real Property Taxes paid by Lessee, then, upon the expiration or sooner termination of the Lease, Lessor shall pay to Lessee the difference obtained by subtracting the credits Lessee has theretofore received against Minimum Rent, Lessor Debt Deficit and Participation Rent from the Real Property Taxes paid by Lessee.

10.2 Definition of Real Property Taxes. The term "Real Property Taxes" as used herein means any and all fees, license fees, commercial rental taxes, assessments (including, without limitation, special assessments), penalties and/or taxes imposed by any taxing authority against the Leased Premises.

10.3 Personal Property Taxes. In each Lease Year, Lessee shall pay all taxes, license fees or other governmental charges assessed or imposed on the Personal Property owned by Lessee located on the Leased Premises or upon the business operations of Lessee conducted on the Leased Premises.

11. UTILITIES. Except as set forth in the immediately succeeding sentence, Lessee shall pay before delinquency all charges for utilities, including electricity, gas, heating, cooling and telephone, used by Lessee in Lessee's operation of the Leased Premises. Notwithstanding the preceding sentence, before delinquency, Lessor shall pay all charges for water used by Lessee in Lessee's operation of the Leased Premises. If Lessor fails to timely pay for any such water, then, at Lessee's option, Lessee may pay for such water and thereafter receive a credit against the Minimum Rent, Lessor Debt Deficit and/or Participation Rent next payable under this Lease equal to the amounts so paid by Lessee with interest thereon in accordance with Section 23.2(e) below.

12. PRORATION OF INCOME AND EXPENSES. As of the expiration or earlier termination of this Lease, Lessor and Lessee shall prorate the following items:

(a) All items of income relating to the operation of the Leased Premises including, without limitation, membership dues, locker fees, bag storage fees, deposits for tournaments, deposits for banquets and other functions, deposits for meetings, gift certificates for merchandise in the pro shop, rain checks and other prepaid items.

(b) All items of expenses relating to the operation of the Leased Premises including, without limitation, real property taxes and other taxes, utilities and any liabilities, if any, under contracts expressly assumed by Lessee relating to the Leased Premises.

As of the Commencement Date, Lessor and Lessee shall prorate the items described in Section 12(b).

At least ten (10) days prior to the Commencement Date, Lessor shall deliver to Lessee a tentative statement of prorations setting forth a preliminary determination of all items to be prorated in the first Lease Year and supported by all detail reasonably necessary to make such determination. Prior to the Commencement Date, Lessor and Lessee shall agree on the actual amount to be prorated.

13. CAPITAL IMPROVEMENTS.

13.1 Completion of Golf Course.

13.1(a) Lessor has heretofore constructed an eighteen (18) hole championship golf course at the Leased Premises in accordance with plans and specifications therefor ("Golf Course Plans") approved by Lessee, and Lessor shall diligently pursue to completion the construction of an approximately 4,500 square foot clubhouse, an approximately 4,800 square foot maintenance facility, an approximately 5,000 square foot golf cart storage facility, an approximately 2,000 square foot pavilion, golf course shelters and restrooms, and other related improvements at the Leased Premises. The work described in the preceding sentence is collectively referred to herein as "Lessor's Work." Subject to the terms and provisions of this Lease, including, without limitation, the terms and provisions of Sections 13.1(b) and 13.1(d) below, Lessee hereby approves the construction of the golf course, except that Lessor shall diligently pursue the completion of the items described on Exhibit "D" hereto ("Golf Course Completion Items") in a manner satisfactory to Lessee. The construction of all of Lessor's Work other than the golf course and the Golf Course Completion Items ("Remaining Work") shall be pursuant to the plans and specifications attached hereto as Exhibit "E," with such modifications thereto as are required by Lessee (such plans, as so modified, are referred to herein as the "Remaining Work Plans"). Lessor shall employ Von Gallagher as Lessor's construction manager to oversee the construction of Lessor's Work, and shall not replace such individual without first obtaining Lessee's prior written consent, which consent Lessee shall not unreasonably withhold or delay. Lessor shall punctually pay and discharge any and all costs, expenses and liabilities for, or in connection with, Lessor's Work including all obligations for labor, materials and services which become payable. To complete Lessor's Work, Lessor must (i) complete the golf course, the clubhouse, the maintenance facility, the cart storage facility, the pavilion, golf course shelters and restrooms, and all entryways, driveways, parking lots and other improvements constituting Lessor's Work, all in accordance with the Golf Course Plans and the Remaining Work Plans; (ii) complete the Golf Course Completion Items in a manner satisfactory to Lessee; (iii) obtain a certificate of occupancy for all improvements constituting Lessor's Work for which a certificate of occupancy is required (A) in order for Lessee to be permitted to use the Leased Premises for all of the uses contemplated by Section 3.1 above (including, without limitation, the sale of food and

beverages contemplated to be sold by Lessee at the Leased Premises), and/or (B) pursuant to applicable law; (iv) obtain and store and/or install, as appropriate, at the Leased Premises all Personal Property described in Exhibit "B" and constituting a part of the Leased Premises; (v) allow the golf course improvements constructed at the Leased Premises to "mature" in accordance with usual and customary golf course industry practice in order to attain the qualities ascribed to a golf course characterized as a championship golf course; and (vi) cause all Facilities (as defined in Section 20.5 below) to be (A) installed across public property or valid easements or rights of way to the boundary lines of the Leased Premises; (B) connected pursuant to valid permits; and (C) in good operating condition. Only at such time as, in the determination of Gary Stephenson, all golf course, all golf-course related improvements and the remainder of the work described above have been constructed, installed and/or connected (as applicable) and the golf course is sufficiently mature to be considered an eighteen (18) hole championship golf course ready for play by the public shall the golf course and the remaining Lessor's Work at the Leased Premises be considered completed for purposes of this Lease. Upon completion of the improvements, Lessor shall provide Lessee with a full set of as-built plans and specifications.

13.1(b) Lessor shall, for the period ending two (2) years after the Commencement Date, guarantee that the golf course and all other improvements constituting Lessor's Work (including, without limitation, the clubhouse, the cart storage facility, the pavilion, the maintenance facility, the golf course shelters and restrooms, the entryways, the driveways and parking lots) are properly constructed, in proper working order and in compliance with all applicable federal, state and local governmental laws, codes, ordinances and regulations ("Laws"), including without limitation, the American's with Disabilities Act and all building, plumbing, electrical, heating, ventilating and air-conditioning, fire, health, environmental (i.e., laws relating to hazardous and toxic waste and substances) and safety and zoning codes. Specifically, without limitation, Lessor shall, at its sole cost and expense, promptly (i) repair any defects in the clubhouse, cart storage facility, maintenance facility and other structures and improvements, (ii) replace and replant, as necessary, any grass on the tees, greens and/or fairways that do not survive in proper condition after the initial maturation of the golf course, (iii) correct any drainage problems which become apparent during said period, and (iv) take all necessary steps to bring the Leased Premises into full compliance with all Laws. If, as a result of

any of the matters described in this Section 13.1(b), Lessee is unable to make full and productive economic use of the Leased Premises, Lessee shall be entitled to an abatement of Minimum Rent otherwise payable under Section 6.1 reasonably calculated to compensate Lessee for Lessee's lost Net Operating Income attributable to the period Lessee is unable to fully and productively use the Leased Premises. Without limiting any other rights or remedies Lessee may have if Lessor does not timely preform Lessor's obligations under this Section 13.1(b), if Lessor fails to timely perform its obligations under subparagraph 13.1(b)(iv), then, upon five (5) days' prior notice to Lessor, Lessee shall have the right, but not the obligation, to pay, on behalf of Lessor, any amounts necessary to effect the compliance with all Laws, and all costs incurred by Lessee in effecting such compliance shall be treated as a credit toward Lessee's rental obligations under Article 6 above.

13.1(c) During the course of construction of the golf course and related improvements, Lessor shall provide Lessee with a minimum of one week's advance notice of any regularly scheduled meeting with Lessor's general contractor, architect or other design professionals and invite Lessee to attend such meetings. In addition, Lessee shall have the right, but not obligation, at any time during the construction of the golf course and related improvements, to enter the Leased Premises to inspect and monitor the construction of the golf course and related improvements and to verify that the same are being constructed in accordance with the approved plans and specifications. Notwithstanding the foregoing, Lessor understands and acknowledges that Lessee shall not be responsible for the construction means, methods, techniques, sequences and procedures employed by Lessor and its contractors and will not be responsible for the failure of Lessor or any contractor to construct the golf course and related improvements in accordance with the requirements of this Lease. At least monthly during the construction of the golf course and related improvements, Lessor shall submit to Lessee written progress reports including information on each contractor and each contractor's work as well as the entire golf course project and showing percentages of completion, the cost of completion to date, and a comparison between the budgeted cost for the project and the actual costs compared to the budgeted costs. Lessor shall maintain, for Lessee's inspection, upon Lessee's request, a copy of all contracts, drawings, specifications, change orders and other modifications, in good order and marked to record all changes made during construction.

13.1(d) At such time as Lessor believes the construction of the golf course and related improvements to be complete, Lessor shall notify Lessee of the same. Promptly after Lessee receives such notice, Lessee and Lessor shall inspect the Leased Premises, and Lessee shall prepare for Lessor a list of incomplete or unsatisfactory items. Promptly after Lessor receives such list, Lessor shall correct and/or complete all such items so noted.

13.2 Capital Improvements Generally.

13.2(a) Lessor's Approval Required. During the term of this Lease, Lessee shall have the right, with Lessor's prior written approval, which approval Lessor shall not unreasonably withhold or delay, to construct such alterations, additions and improvements ("Improvements") to the Leased Premises as Lessee shall deem necessary and appropriate. Lessee hereby acknowledges that Lessor may have a contractual obligation to obtain Lessor's architect's consent to certain Improvements.

13.2(b) Closure. In constructing the Improvements, Lessee may find it necessary at times to temporarily close portions of the golf course being operated on the Leased Premises. If Lessee finds it necessary to temporarily close portions of the golf course pursuant to the preceding sentence, then Lessee shall give prompt written notice of the same to Lessor.

13.2(c) Contracting Procedures. All work in connection with the construction of any Improvements, (including any site preparation, landscaping or utility installation), shall be performed only by Lessee or pursuant to written contracts with competent and financially responsible independent contractors. Without Lessor's prior written approval, which approval Lessor shall not unreasonably withhold, each such contract shall provide that the final payment due to the contractor under said contract shall equal a reasonable retention amount and said final payment shall not be paid to the contractor until the occurrence of both of the following events:

(i) The expiration of thirty (30) days from the completion of said Improvements; and

(ii) The settlement and discharge of all liens and charges claimed by persons who supplied either labor or materials for the construction of said Improvements.

13.2(d) Copy of Contract. Lessee shall furnish Lessor with a true copy of Lessee's contract with the contractor and with evidence of the contractor's financial condition for Lessor's approval, which approval shall not be unreasonably withheld or delayed. The contract shall give Lessor the right but not the obligation to assume Lessee's obligations and rights under such contract if Lessee should default. Lessee shall have the right to secure pre-approval from Lessor of the form of contract and the contractor's financial condition prior to the execution of the final contract.

13.2(e) Compliance With Laws. The Improvements shall conform with all applicable governmental rules, regulations and orders in all material respects. Prior to commencement of construction, Lessee shall procure, as an Operating Expense, all necessary building, fire safety and other permits. Lessor will cooperate with Lessee in obtaining such permits; provided, however, that this covenant to cooperate shall not be deemed or construed as a waiver of any right or obligation of the City of Rowlett acting in its governmental capacity. All Improvements performed on the Leased Premises pursuant to this Lease, or authorized by this Lease, shall be done in a good professional and workmanlike manner and only with materials of good and workmanlike quality.

13.2(f) Builder's Risk and Other Insurance. Lessee shall obtain insurance coverage for "builder's risks" in connection with any Improvements performed on the leased Premises in accordance with the conditions set forth in Article 16 below.

13.2(g) Discharge of Liens. Lessee shall keep the Leased Premises, including all buildings and improvements now or hereafter located on the Premises, free and clear of all liens and claims of liens for labor, services, materials, supplies, or equipment performed on or furnished to the Leased Premises and arising out of Improvements constructed upon the Leased Premises by Lessee. If such a lien attaches to the Leased Premises, Lessee shall promptly pay and discharge, or cause the Leased Premises to be released from, any such lien or claim or lien, or if Lessee decides to contest said lien, furnish Lessor a bond issued by a surety company, reasonably satisfactory to Lessor, in an amount equal to one hundred twenty-five percent (125%) of the amount of the lien, securing Lessor against payment of such lien and against any and all loss or damage whatsoever in any way arising from Lessee's failure to pay or discharge such lien. Should Lessee fail to pay and discharge, or cause the Leased Premises to be released

from any such lien or claim of lien or to provide a bond as permitted hereunder after a written request to do so, Lessor may pay, adjust, compromise and discharge any such lien or claim of lien on such terms and in such manner as Lessor may deem appropriate. In such event, Lessee shall, on or before the first day of the next calendar month following any such payment by Lessor, reimburse Lessor for the full amount so paid by Lessor, including any reasonable attorneys' fees or other costs reasonably expended by Lessor, together with interest thereon at the rate set forth in Section 23.2(e) below from the date of payment by Lessor to the date of Lessee's reimbursement to Lessor.

13.2(h) Notification of Commencement of Work. Lessee shall notify Lessor in writing at least ten (10) days prior to the commencement of any Improvements on the Leased Premises.

13.3 Capital Improvements Reserve. In any Lease Year in which Net Operating Income generated at the Leased Premises exceeds Base Line NOI for such Lease Year, Lessee shall credit in a capital improvement reserve fund ledger the lesser of (a) two percent (2%) of Gross Revenue for such Lease Year; or (b) the amount by which Net Operating Income exceeds Base Line NOI for such Lease Year. No interest shall accrue on amounts credited in any capital improvement reserve fund ledger. Lessee shall not be required to keep the amounts credited in any capital improvement reserve fund ledger separate from its other accounts, and no trust relationship is created with respect to the amounts credited. The amounts credited by Lessee to a capital improvement fund ledger in accordance with the provisions of this Section 13.3 shall be made available by Lessee from Lessee's non-segregated funds for constructing Improvements during the Lease term that are approved by Lessor and Lessee in accordance with the provisions of Section 13.2 above. Any credit remaining in any capital improvement reserve fund ledger upon the expiration or sooner termination of this Lease shall be split between Lessee and Lessor in such a manner so that Lessor receives the same percentage of the same that Lessor would have received had such remaining credit been distributed in accordance with Section 6.2 above in the applicable Lease Years from which the remaining credit derived.

13.4 Ownership of Improvements; No Liens. During the Lease term, all Improvements (as defined in Section 13.2 above) shall be the property of Lessee. All Improvements shall become the property of Lessor upon the expiration or sooner termination of this Lease unless otherwise agreed by Lessor in writing. Lessee

shall not have the right to create or permit the creation of any lien attaching to Lessor's interest in the Leased Premises as a result of any construction of any Improvements.

13.5 Curb Work. Lessor and Lessee hereby acknowledge and agree that Lessee shall have the right, at Lessee's sole cost and expense except as provided below, to perform such cart path curbing work ("Curb Work") at the Leased Premises as Lessee reasonably desires. If Lessee elects to perform any Curb Work, then the cost thereof, up to a maximum of Eighty Thousand Dollars ($80,000), together with interest thereon from the date paid by Lessee (collectively, "Curb Work Reimbursement Amount") shall be reimbursed to Lessee by Lessor solely out of the first installments of Participation Rent payable hereunder until the Curb Work Reimbursement Amount has been reimbursed to Lessee in full. If there is insufficient Participation Rent to repay the entire Curb Work Reimbursement Amount prior to the expiration of the Term, then all remaining and unpaid Curbing Work Reimbursement Amount shall be automatically forgiven.

14. MAINTENANCE AND REPAIRS - LESSEE'S OBLIGATIONS. Except as otherwise provided in this Lease, (i) Lessor shall not be required to maintain or make any repairs or replacements of any nature or description whatsoever to the Leased Premises or the improvements thereon; and (ii) Lessee shall, at its sole cost, maintain and repair the Leased Premises and keep the Leased Premises in good order and repair and in sanitary condition comparable to the condition of other high-end daily fee and resort golf courses in the Dallas/Ft. Worth metropolitan area with a comparable (a) quality of physical improvements, (b) maintenance standards and (c) green fee structure ("Comparable Golf Courses"), and in accordance with the maintenance standards attached hereto as Exhibit "F." Lessor and Lessee further acknowledge and agree that the Comparable Golf Courses may change from time-to-time during the Lease term. In addition, subject to Lessor's obligation to deliver the Leased Premises in compliance with all "Laws" (as defined in Section 13.1(b)) as provided in Section 13.1(b), Lessee shall keep and maintain the Leased Premises in compliance with all Laws during the Lease term.

15. LESSOR'S COOPERATION. Lessor recognizes and acknowledges that Lessee will need the assistance and cooperation of Lessor in order to properly perform and fulfill Lessee's covenants and obligations under this Lease. Therefore, Lessor agrees it shall use reasonable efforts to assist Lessee in obtaining, all permits

or licenses (other than a private club registration permit) that are required in order for Lessee to fulfill its obligations under this Lease. Lessee shall not object to Lessee's obtaining a private club registration permit for the Leased Premises so long as Lessee complies with all laws of the City of Rowlett applicable to the obtaining of such permit. Lessor further agrees it shall designate a specific officer or agent having appropriate experience and authority whose responsibility it is to work with Lessee in assuring that Lessee obtains the full cooperation and assistance of Lessor, subject to the terms of this Lease and all applicable laws.

16. INSURANCE.

16.1 Insurance Coverage. Lessee shall maintain the following types of insurance coverage relating to the Leased Premises and Lessee's operations of the Leased Premises at all times throughout the Lease term:

16.1(a) Liability Insurance. Lessee shall maintain, at Lessee's sole expense, a policy or policies of comprehensive general liability insurance, with coverage of not less than the greater of (i) two million dollars ($2,000,000.00), or (ii) the amount required by the Texas Tort Claims Act, combined single limit for bodily injury and property damage. Lessor shall be named as an additional insured on such policy.

16.1(b) Worker's Compensation. Lessee shall maintain, at Lessee' sole expense, a policy or policies of worker's compensation insurance in compliance with applicable Texas law.

16.1(c) Fire Insurance. Lessee shall maintain, at Lessee's sole expense, a standard form policy or policies of fire and extended coverage insurance on the Leased Premises, including the clubhouse and related buildings and all Personal Property, furnishings and equipment at the Leased Premises with coverage limits not less than the full replacement cost of the Leased Premises. Lessee shall also maintain insurance coverage on the Personal Property and the furnishings, equipment and other personal property owned by Lessee at their full replacement cost, or otherwise assume financial liability for the Personal Property and the furnishings, equipment and other personal property owned by Lessee.

16.1(d) Rental Interruption Insurance. Promptly after Lessor's written request therefor, Lessee shall purchase, at

Lessor's sole cost and expense and for Lessor's benefit, a policy of rental interruption insurance in such amount as Lessor requests.

16.2 General Provisions. In fulfilling its obligations for the acquisition of insurance coverage under Sections 16.1(a), (b) and (c) above, Lessee shall have the right to self-insure up to a maximum of Two Hundred Fifty Thousand Dollars ($250,000) per occurrence (subject to increase by the percentage increase in each Lease Year in the CPI (as defined above) over the CPI in effect as of the Commencement Date). If Lessee elects to self-insure in accordance with the preceding sentence, then Lessee shall make such self-insurance amounts available to cover applicable losses at the same time as the third party insurer which issues the applicable policy under Section 16.1 above would be required to make insurance proceeds available to cover the applicable losses. Lessee shall assure that the policies of insurance to be maintained by it shall not be subject to cancellation except upon at least ten (10) days' written notice to Lessor. Any insurance required to be carried under this Lease may be included as part of any blanket or other policy or policies of insurance, subject to the provisions of this Lease.

16.3 Failure to Insure. If Lessee fails to procure or maintain insurance required under this Lease, then Lessor may, at its discretion, procure or renew such insurance and pay any and all premiums in connection therewith, and all monies so paid by Lessor shall be repaid by Lessee to Lessor upon demand, including interest thereon at the rate set forth in Section 23.2(e) below from the date paid by Lessor through date of Lessee's reimbursement to Lessor.

16.4 Suspension of Operations. Lessee shall suspend and cease all of Lessee's operations on the Leased Premises during such periods of time as Lessee is not maintaining the insurance coverage Lessee is required to maintain under this Article 16, unless in its sole discretion Lessor waives such suspension.

16.5 Acceptability of Insurers. Lessor requires that insurance be placed with companies holding a "General Policy Rating" of A-12 or better, as set forth in the most current issue of "Best Key Rating Guide," provided that such requirement shall be waived for workers' compensation coverage that is placed with companies who participate in the State of Texas Workers' Compensation Assigned Risk Pool.

16.6 Verification of Coverage. Lessee shall furnish Lessor with certificates of insurance evidencing the coverage Lessee is required to maintain under this Article 16.

17. INDEMNITY.

17.1 Lessee's Indemnity. Lessee shall indemnify, protect, defend and hold harmless Lessor and its owners, officers, directors, shareholders and employees from all claims, demands, causes of action and liability resulting from Lessee's operations at the Leased Premises during the Lease term, or as a proximate result of the acts or omissions of Lessee or its employees or agents (including, without limitation, as a result of liens attaching to Lessor's interest in the Leased Premises due to Lessee's construction of Improvements). This foregoing indemnity does not apply, however, to the extent that any such liability is the result of the direct and proximate negligence or willful misconduct of Lessor or Lessor's employees or agents.

17.2 Lessor's Indemnity. To the extent permitted by applicable law, Lessor shall indemnify, protect, defend and hold harmless Lessee and its owners, officers, directors, shareholders and employees from and against any and all claims, demands, causes of action and liability resulting from any of the following: (a) any event, condition or activity occurring or existing prior to the Commencement Date including, without limitation, the construction of the golf course and related improvements, any contracts entered into by Lessor relating to said construction and any liens, payments or other changes related thereto; (b) Lessor's performance of, or failure to perform, its obligations under any labor or employment condition or situation occurring or existing prior to the Commencement Date; (c) the presence in, on, under or about the Leased Premises, or the escape, seepage, leakage, spillage, discharge, emission or release, of any hazardous materials, toxic substances or petroleum products (as defined or regulated under any and all Laws) from or through the Leased Premises either (i) prior to the Commencement Date of this Lease or (ii) after the Commencement Date where the same is not a proximate result of the acts or omissions of Lessee, or any environmental conditions (including, without limitation, wetland conditions) emanating, occurring or arising (1) prior to the Commencement Date of this Lease or (2) after the Commencement Date where the same is not a proximate result of the acts or omissions of Lessee, it being expressly understood and acknowledged that Lessor's indemnity of Lessee shall include, without limitation, any and all costs of any

required or necessary repair, clean-up, remediation or decontamination of the Leased Premises and the preparation and implementation of any closure, remedial or other required plans; (d) any act or omission constituting negligence or wilful misconduct on the part of Lessor or Lessor's employees or agents; (e) any pending or threatened claims, actions, litigation, proceedings, governmental investigations as of the Commencement Date; and (f) any and all federal, state, county and municipal taxes, assessments, penalties and other charges (including, without limitation, sales tax) relating to the Leased Premises or the use or operation thereof for the period up to the Commencement Date. Notwithstanding any provision of this Section 17.2 to the contrary, Lessor shall not be required to indemnify, protect, defend or hold harmless Lessee from and against any act or omission of Lessee which constitutes a default by Lessee under the written maturation agreement relating to the golf course on the Leased Premises heretofore executed by Lessor and Lessee.

18. DAMAGE AND RESTORATION.

18.1 Total Destruction. If the improvements on the Leased Premises (including, without limitation, the golf course, clubhouse, maintenance facility and other buildings comprising a portion thereof), should be totally destroyed (i.e., damage in excess of partial destruction as defined in Section 18.2) by fire or other casualty or a force majeure occurrence, Lessee and Lessor shall each have the option, to be exercised in writing within sixty (60) days of such destruction, to terminate this Lease in which event, subject to Section 18.7 below, the parties shall have no further obligations hereunder. If this Lease is not terminated pursuant to this Section 18.1, then Lessee shall diligently pursue repair and restoration of the Leased Premises to completion to a condition as good as or better than the condition of the Leased Premises immediately prior to the destruction.

18.2 Partial Destruction. If the improvements on the Leased Premises (including, without limitation, the golf course, clubhouse, maintenance facility and other buildings comprising a portion thereof) leased under this Lease should be partially damaged by fire or other casualty or a force majeure event, then Lessee shall, subject to the availability of insurance proceeds (it being understood and acknowledged that the insurance proceeds available to Lessee shall be deemed to include any amounts with respect to which Lessee elects to self insure, and any deductibles associated with such insurance), restore the improvements at the

Leased Premises (including, without limitation, the golf course, clubhouse, maintenance facility and other buildings comprising a portion thereof) in a good and workmanlike manner to a condition as good as or better than the condition in which the buildings, improvements and Personal Property existed prior to their damage or destruction. For purposes of this Lease, the term "partially damaged" means (a) damage to the extent of one third or less of the value of the improvements at the Leased Premises (including, without limitation, the golf course, clubhouse, maintenance facility and other buildings comprising a portion thereof) or (b) damage to the extent that no more than nine holes on the golf course at the Leased Premises are rendered unplayable. If the insurance proceeds made available to Lessee are not sufficient to fully restore the Leased Premises, then Lessee may terminate this Lease upon written notice to Lessor in which event the parties shall have no further liability hereunder. In addition, notwithstanding anything in this Section 18.2 to the contrary, if, as a result of the partial destruction of the Leased Premises, Lessee is unable to make full and productive economic use of the Leased Premises and, in Lessee's reasonable determination, the full and complete restoration of the Leased Premises will take in excess of one (1) year, then Lessee may, upon written notice to Lessor within sixty (60) days after the partial destruction occurs, terminate this Lease, in which event the parties shall have no further obligations hereunder.

18.3 Damage During the Last Two Years of the Lease Term. Notwithstanding the provisions of Section 18.2 to the contrary, if during the last two years of the Lease term, the buildings or other improvements on the Leased Premises, or the Personal Property leased under this Lease is damaged to the extent of ten percent (10%) of the value of the buildings, improvements and Personal Property at the Leased Premises or more, then Lessee and Lessor shall each have the option, to be exercised within thirty (30) days of such damage or destruction, to terminate this Lease in which event, subject to Section 18.7 below, the parties shall have no further obligations hereunder. If this Lease is not terminated pursuant to this Section 18.3, then Lessee shall repair and restore the Leased Premises in accordance with the provisions of Section 18.2 above.

18.4 Rental Abatement and Term Extension. If Lessee's use of the Leased Premises is impaired during repair, reconstruction or replacement as provided for in this Section, Lessee's rental obligations under Article 6 shall be equitably

abated until such time as Lessee is again fully able to do so. The Lease term shall also be extended for a period equivalent to the length of time required to restore the Leased Premises and make them available to Lessee for Lessee's use pursuant to Section 3.1 of this Lease, provided such extension shall not exceed twenty-four (24) months.

18.5 Application of Insurance Proceeds Upon Termination. If, after the partial or total destruction of the Leased Premises, this Lease is terminated pursuant to the provisions of this Article 18, then the insurance proceeds made available on account of such destruction shall be allocated pro rata to Lessee and Lessor based upon the amounts each paid for the items damaged for which insurance proceeds are available.

18.6 Notification by Lessee. Lessee shall give written notice to Lessor of any material damage to the Leased Premises within ten (10) days after Lessee's discovery of the material damage.

19. EMINENT DOMAIN.

19.1 Total Taking. If at any time during the Lease term, use of all or a material portion of the Leased Premises shall be taken by condemnation or by right of eminent domain, this Lease shall terminate on the date of such taking and all rental payments already made shall be apportioned as of the date of the taking. For purposes of this Article, a "material portion" shall be deemed to have been taken if the remaining portion cannot economically be used by Lessee, in Lessee's reasonable judgment, in the manner in which the Leased Premises were used prior to such taking.

19.2 Partial Taking. In the event that use of less than all or a material portion of the Leased Premises is taken by condemnation or by right of eminent domain, this Lease shall not terminate, but the Minimum Rent due during the remainder of the Lease term shall be reduced as of the date of such partial taking in a proportion to the reduction in the Gross Revenues of the Leased Premises attributable to such partial taking.

19.3 Condemnation Award. If there is a taking by right of eminent domain, the award shall belong to and be paid to Lessor, except that Lessee shall receive from the award the following: (a) a sum attributable to the value of Lessee's leasehold estate, including improvements, and (b) a sum attributable to Lessee's loss

of good will, to the extent (i) the award is determined in a legal proceeding, (ii) there is a separate allocation by the condemning authority to Lessee's loss of good will, or (iii) the condemning authority makes a separate award in Lessee's name.

20. REPRESENTATIONS, WARRANTIES AND COVENANTS.

20.1 Power and Authority. Lessor hereby represents and warrants that it has the requisite right, power, legal capacity and authority to enter into this Lease and to fully perform each and all of its obligations under this Lease. Lessee hereby represents and warrants that it has the requisite right, power, legal capacity and authority to enter into this Lease and to fully perform each and all of its obligations under this Lease.

20.2 No Conflict. Lessor represents and warrants that neither this Lease nor the consummation of the transactions contemplated by this Lease will result in a breach of or constitute a default under any other agreement, commitment or obligation to which Lessor or the Leased Premises is bound, nor will it violate any law, rule, regulation, restriction, judicial or administrative order, judgment or decree applicable to Lessor or the Leased Premises. Lessee represents and warrants that neither this Lease nor the consummation of the transactions contemplated by this Lease will result in a breach of or constitute a default under any other agreement, commitment or obligation to which Lessee is bound, nor will it violate any law, rule, regulation, restriction, judicial or administrative order, judgment or decree applicable to Lessee.

20.3 Encumbrances. Lessor shall not (a) convey to the public or dedicate to the public all or any portion of the Leased Premises, or (b) consent to the Leased Premises being included as part of an assessment district, in each case without obtaining Lessee's prior written consent, which consent shall be granted or withheld in Lessee's reasonable discretion.

20.4 Title to Premises; Separate Legal Parcel. Lessor hereby represents and warrants that it has good and indefeasible fee simple title to the Leased Premises, free and clear of all monetary liens and encumbrances. Lessor further represents and warrants that the Leased Premises constitutes a separate legal parcel of real property and complies with all applicable subdivision laws of the State of Texas, and all applicable ordinances of the City of Rowlett.

20.5 Utilities. As of the Commencement Date, Lessor shall, at Lessor's sole cost and expense, use Lessor's best efforts to cause all water, sewer, gas, electric, telephone and drainage facilities and all other utilities required by law for the intended use and operation of the Leased Premises (collectively, "Facilities") to be (i) installed across public property or valid easements or rights of way to the boundary lines of the Leased Premises; (ii) connected pursuant to valid permits; and (iii) in good operating condition.

20.6 Zoning: Licenses and Easements. Lessor hereby represents and warrants that (a) the use of the Leased Premises as a golf course and related activities, including the sale of food and alcoholic beverages, complies with the designated zoning of the Leased Premises; (b) as of the Commencement Date, Lessor shall have obtained all licenses, permits, easements and rights-of-way, including proof of dedication, required from all governmental authorities having jurisdiction over the Leased Premises or from private parties for the intended use and operation of the Leased Premises as a golf course and related activities and to assure vehicular and pedestrian ingress to and egress from the Leased Premises at all access points to be used; and (c) as of the Commencement Date, Lessor shall have obtained adequate easements benefitting the Leased Premises to accommodate water run-off and drainage from the Leased Premises, including without limitation easements for the use of water lines, pipes, ditches, drainage channels or other drainage facilities which are located outside of the Leased Premises and are connected to any storm drain or other water run-off facility located within the Leased Premises.

20.7 No Third Party Rights. Lessor hereby represents and warrants that, to the best of Lessor's knowledge, no third party has any right or interest in the Leased Premises that would interfere with Lessee's use and operation of the Leased Premises. To the best of Lessor's knowledge, Lessor has obtained all necessary approvals from non-governmental third parties in order to enter into this Lease.

20.8 No Hazardous Materials. Lessor hereby represents and warrants that, to Lessor's best knowledge, there has been no production, generation, treatment, collection, disposal, discharge or storage on the Leased Premises or in any groundwater or aquifer below the surface of the Leased Premises by Lessor, or to Lessor's best knowledge by any prior owner or occupant of the Leased Premises or any other person, of any hazardous or toxic substance,

material or waste in violation of any applicable federal, state or local environmental laws, ordinances, restrictions, licenses or regulations, including, but not limited to, the Federal Water Pollution Control Act (33 U.S.C. §1251 et seq.), Resource Conservation and Recovery Act (42 U.S.C. §6901 et seq.), Safe Drinking Water Act (42 U.S.C. §3000(f) et seq.), Toxic Substances Control Act (15 U.S.C. §2601 et seq.), Clean Air Act (42 U.S.C. §7401 et seq.), Comprehensive Environmental Response, Compensation and Liability Act (42 U.S.C. §9601 et seq.), and other similar statutes of the State of Texas or the County of Dallas. Lessor has not received any notices from any governmental agency or other third party regarding the existence of any hazardous or toxic substance, material, or waste on the Leased Premises or in the improvements thereon or requiring the removal, clean-up, or remediation of any environmental condition relating to the Leased Premises. Lessor represents and warrants that, to Lessor's best knowledge, (i) the Leased Premises is not subject to any enforcement action by any governmental agency regarding the environmental condition of the Leased Premises, (ii) the Leased Premises has not been assigned an identification number, and (iii) the Leased Premises is not the subject of an environmental report by the State of Texas or any of its subdivisions. Lessor represents and warrants that, to Lessor's best knowledge, no asbestos-containing materials or polychlorinated byphenyls (i.e., PCBs) are contained in or stored on the Leased Premises. Lessor further represents and warrants that, to Lessor's best knowledge, there are no underground or above-ground storage tanks located on the Leased Premises. As used herein, the terms "toxic" or "hazardous" wastes, substances or materials shall include, without limitation, all those so designated and all those in any way regulated by any of the above-cited laws or regulations, or any other present or future environmental or other similar laws or regulations.

20.9 Termination of Contracts. Lessor shall, effective prior to the Commencement Date, terminate all contracts, if any, and agreements relating to the Leased Premises which if not terminated would bind Lessee or have a material adverse impact on Lessee's operations at the Leased Premises.

20.10 Termination of Employees; Obligation of Benefits. Lessor shall, effective as of the Commencement Date, terminate the employment of all of its employees at the Leased Premises, if any, and shall assume full responsibility for all employee salaries, vested and non-vested benefits, vacation pay, and seniority rights

due and owing as of the Commencement Date, if any. Lessee may re-hire such terminated employees as Lessee, in its sole discretion, desires subject to such policies, salaries and benefits as Lessee may establish.

20.11 No Litigation or Reassessment. Lessor represents and warrants that there is no claim, action, litigation, arbitration, or other proceeding pending or, to the best of Lessor's knowledge, threatened against Lessor which relates to the Leased Premises or the transaction contemplated hereby or which could result in the imposition of the lien against the Leased Premises. If Lessor receives notice of any such claim, litigation or proceeding prior to the Commencement Date, Lessor shall promptly notify Lessee of the same in writing. In addition, Lessor represents and warrants that Lessor has no knowledge of any proposed reassessment of the Leased Premises by the local taxing agencies and has no knowledge that there is any pending or threatened special assessment district or other action which would increase real property taxes or assessments against the Leased Premises.

20.12 No Violations of Law. Lessor represents and acknowledges that neither the Leased Premises nor Lessor is in violation of, and Lessor has not received any notice of violation of, any law, ordinance, regulation, order or requirement applicable to the Leased Premises including, without limitation, requirements imposed under any recorded covenants, conditions, restrictions, easements or other rights affecting the Leased Premises. If Lessor receives such a notice at any time, either prior to or after the Commencement Date, Lessor shall immediately notify Lessee in writing.

20.13 Water Rights. Lessor represents and warrants to Lessee that Lessor has delivered to Lessee true, correct and complete copies of all documents, agreements, instruments, certifications, registrations, and permits evidencing Lessor's entitlement to a water supply adequate for the construction, operation and maintenance of the Leased Premises as a high-end daily fee golf course (collectively the "Water Documents"). Lessor further represents and warrants that all of Lessor's rights to water pursuant to the Water Documents shall be available for Lessee's use without additional charge or consent by any party. Upon the expiration or sooner termination of Lessor's rights under the Water Documents, Lessor shall cause water to be available for use at the Leased Premises for the remaining Lease term in a

quantity and at a cost comparable to the quantity and cost of water available for use at the Leased Premises under the Water Documents.

20.14 Correct and Complete Documentation. All of the Documents delivered by Lessor to Lessee in connection with this Lease are true, correct and complete.

20.15 No Omissions or Misstatements. All of the representations and warranties contained in this Article 20 are true and correct on the date hereof and will be true and correct as of the Commencement Date, and no representation by Lessor or Lessee or in any statement or exhibit required to be furnished hereunder misstates, omits or shall misstate or omit, a fact necessary to make the statement thereon not misleading. Upon Lessee's request therefor, Lessor shall execute a certificate reaffirming that all of the representations and warranties contained in this Article 20 are true and correct as of the Commencement Date. Immediately upon discovering any fact which would render any representation or warranty in this Lease untrue, incorrect or misleading in any respect, Lessor or Lessee, as the case may be, shall immediately notify the other in writing.

21. FRUSTRATION OF PURPOSE. At any time during the Lease term, (i) if the governing body of any political subdivision having competent jurisdiction over the Leased Premises should enact any valid zoning or other ordinance, law or regulation (collectively, "Use Law") which prohibits the use of the whole or a substantial part of the Leased Premises for the purposes as provided in Section 3.1 of this Lease; or (ii) subject to Article 18 above, if an event of force majeure (collectively, "Force Majeure Event") occurs, including without limitation, declared or undeclared war, sabotage, riot or other acts of civil disobedience, acts or omissions of government, labor disputes, shortages of fuel or other materials, accidents, explosions, floods, earthquakes, or other acts of God, which substantially prevents Lessee's use of the Leased Premises as provided for in Section 3.1 of this Lease for a period of ninety (90) days or longer, it is agreed that Lessee may elect, within one hundred twenty (120) days after (a) the effective date of such Use Law, or (b) the expiration of such ninety (90) day period with respect to a Force Majeure Event, to cancel this Lease and surrender possession of the Leased Premises. In addition, at any time during the Lease term, if Facilities become unavailable or inadequate so as to substantially interfere with Lessee's use of the Leased Premises as provided in Section 3.1 of this Lease, Lessee shall notify Lessor of the same in writing, and if Lessor

does not cure such unavailability or inadequacy to Lessee's reasonable satisfaction within one hundred twenty (120) days after Lessee notifies Lessor of the same, it is agreed that Lessee may elect, within one hundred twenty (120) days after the expiration of Lessor's cure period, to cancel this Lease and surrender possession of the Leased Premises. Any cancellation and surrender pursuant to this Article 21 shall act to release and discharge Lessee from any further obligation under this Lease. In addition, it is agreed that during the period of any Force Majeure Event (subject to Article 18 above); during the period that Facilities are unavailable or inadequate; and/or during any period that any defect in the Leased Premises substantially interferes with Lessee's use of the Leased Premises as provided in Section 3.1 of this Lease, except for the respective obligations of Lessor and Lessee under Article 17 above, Lessor and Lessee shall be excused from performing their respective obligations under this Lease whether or not Lessee exercises its right to terminate as provided herein.

22. ASSIGNMENT.

22.1 Assignment by Lessor. Lessor may assign this Lease and all of its rights and obligations hereunder at any time without the consent of Lessee. In the case of any such assignment, the assignee shall assume all of Lessor's obligations hereunder.

22.2 Assignment by Lessee. Except as otherwise provided below, Lessee shall not assign this Lease or sublet all of the Leased Premises (each, a "Transfer") without the prior written consent of Lessor, which consent shall not be unreasonably withheld or delayed. Lessee shall notify Lessor of any proposed assignment or subletting at least thirty (30) days prior to the proposed effective date of such assignment or subletting. Lessor's consent shall not be required for any assignment or sublease of all or any portion of Lessee's interest in this Lease to any corporation, partnership or other entity which controls, is controlled by or is under common control with Lessee or David G. Price (it being understood and agreed that any assignment or sublease to any such entity shall not release Lessee from its obligations under this Lease), and, in addition, it shall be unreasonable for Lessor to withhold its consent to any assignment or sublease of all or any portion of Lessee's interest in the Lease to any individual, corporation, partnership or other entity with a tangible net worth of at least Twenty Million Dollars ($20,000,000) determined in accordance with generally accepted accounting principles, provided that, in each such instance, the transferee shall (i) employ a

senior management team with a demonstrable record of golf course operations experience as of the effective date of the Transfer to perform Lessee's obligations hereunder (it being agreed that, if Lessee's senior management team remains substantially intact following the Transfer, this condition shall be deemed satisfied); and (ii) have the requisite general qualifications to do business with the City of Rowlett. In the case of a Transfer, the transferee shall assume in writing all of Lessee's obligations under this Lease. Notwithstanding the foregoing to the contrary, Lessee shall be permitted to enter into subleases or concession agreements for the operation of the pro shop, food and beverage services and other related activities at the Leased Premises and such subleases and/or concession agreements shall not be considered assignments for purposes of this Article 22.

23. BREACH AND REMEDIES. The following conditions will constitute a breach of this Lease and a default thereunder:

23.1 Conditions of Default.

23.1(a) If Lessee fails to pay Minimum Rent to Lessor, and Lessee fails to cure such failure within ten (10) days after written notice from Lessor to Lessee of such default, provided that Lessor shall not be required to give any such notice more than two (2) times in any calendar year.

23.1(b) If Lessee fails to fulfill any monetary obligation of Lessee to Lessor other than the obligation to pay Minimum Rent, and Lessee fails to cure such monetary default within ten (10) days after written notice from Lessor to Lessee of such monetary default.

23.1(c) If either party fails to perform any of its other non-monetary obligations under this Lease when due or called for, and the party in default fails to cure such non-monetary default within sixty (60) days after written notice from the non-defaulting party of such non-monetary default; provided, however, that if the nature of the non-monetary default is of a nature such that it cannot be fully cured within that sixty (60) day period, the party in default shall have such additional time as is reasonably necessary to cure the default so long as the party in default is proceeding diligently to complete the necessary cure after service of notice by the non-defaulting party.

23.1(d) If Lessee abandons the Leased Premises or if Lessee vacates the Leased Premises (defined to be ten (10) or more days of continuous absence from the Leased Premises by Lessee coupled with Lessee's failure to pay Minimum Rent for that period in violation of this Lease).

23.1(e) If an event of insolvency occurs, which event shall be any of the following: Lessee or Lessor shall make an assignment for the benefit of creditors; Lessee or Lessor shall file or acquiesce in a petition in any court (whether or not pursuant to any statute of the United States or of any state) in any bankruptcy, reorganization, composition, extension, arrangement or insolvency proceedings; Lessee or Lessor shall make an application in any such proceedings for, or acquiesce in, the appointment of a trustee or receiver for it of all or any portion of its property; any petition shall be filed against Lessee or Lessor to which it does not acquiesce in any court (whether or not pursuant to any statute of the United States or any state) in any bankruptcy, reorganization, composition, extension, arrangement or insolvency proceedings, and the proceedings shall not be dismissed, discontinued or vacated within sixty (60) days; any proceedings pursuant to the application of any person other than Lessee or Lessor to which Lessee or Lessor does not acquiesce, in which a receiver or trustee shall be appointed for Lessee or for all or any portion of the property of Lessee or Lessor, and the receivership or trusteeship shall not be set aside within sixty (60) days after such appointment; or any judgment, writ, warrant, attachment or execution or similar process shall be issued or levied against a substantial part of the property of Lessee or Lessor and such judgment, writ or similar process shall not be released, vacated or fully bonded within sixty (60) days of its issue or levy; provided, that if it is determined that this Lease may be assumed by Lessee's trustee in bankruptcy notwithstanding the above provision and notwithstanding Lessor's reliance on Lessee's particular skill, expertise and character in entering this Lease, said trustee in bankruptcy may not assign this Lease unless said proposed assignee (i) is as financially responsible as Lessee; (ii) is of good standing and repute; (iii) is comparably staffed to Lessee, has sufficient experience in the management of first-class golf courses, and is possessed with comparable business acumen to that of Lessee; and (iv) all other provisions of 11 U.S.C. Section 365(f), as well as other applicable bankruptcy law provisions for Lessor's benefit and protection, are satisfied before any assignment of Lessee's rights, or assumption of Lessee's obligations, under this Lease. This paragraph shall not be deemed

to waive any of Lessor's or Lessee's rights under bankruptcy law or otherwise.

23.2 Remedies.

23.2(a) Lessor's Right to Terminate. If any of the conditions applicable to Lessee identified in Section 23.1 above should occur and Lessee does not cure the default, Lessor may elect to terminate this Lease immediately and seek all remedies as provided under law and equity. If Lessor shall so elect to terminate this Lease, then Lessor may recover from Lessee:

(i) The worth at the time of award of any unpaid Rent (as defined below) which had been earned at the time of such termination; plus

(ii) The worth at the time of award of the amount by which the unpaid Rent which would have been earned after termination until the time of award exceeds the amount of such rental loss that Lessee proves could have been reasonably avoided; plus

(iii) The worth at the time of award of the amount by which the unpaid Rent for the balance of the Lease term after the time of award exceeds the amount of such rental loss that Lessee proves could be reasonably avoided; plus

(iv) Any other amount necessary to compensate Lessor for all the detriment proximately caused by Lessee's failure to perform its obligations under this Lease or which in the ordinary course of things would be likely to result therefrom; and

(v) At Lessor's election, such other amounts in addition to or in lieu of the foregoing as may be permitted from time to time by applicable Texas law.

The term "Rent" as used herein shall be deemed to include the rental and all other sums required to be paid by Lessee to Lessor pursuant to the terms of this Lease. As used in subsections (i) and (ii) above, the "worth at the time of award" is computed by allowing interest at the legal rate per annum. As used in subparagraph (iii) above, the term "worth at the time of award" is computed by discounting such amount at the discount rate of the

Federal Reserve Bank of Dallas at the time of award minus one percent (1%).

23.2(b) Right to Reenter. If any of the conditions applicable to Lessee identified in Section 23.1 above should occur and Lessee does not cure the default (each a "Lessee Event of Default"), Lessor shall also have the right, with or without terminating this Lease, to reenter the Leased Premises and remove all persons and property therefrom by summary proceedings or otherwise. Such property on the Leased Premises may be removed and stored in a public warehouse or elsewhere at the cost of and for the account of Lessee. Notwithstanding any provisions of this Lease which may be or appears to be to the contrary, in the event of any Lessee Event of Default, Lessor may also elect to assume operation of the golf course at the Leased Premises and retain all of Lessee's fixtures, furniture, equipment, and any other personal property on the Leased Premises and, in that event, and continuing during the continuation of said Lessee Event of Default, Lessor shall have the right to take the exclusive possession of same and to use same, rent or charge free and without liability for damage. The election of one remedy for any one item of property should not foreclose an election of any other remedy for another item or for the same item at a later time.

23.2(c) Right to Relet on Lessee's Account. In the event of the vacation or abandonment of the Leased Premises by Lessee, or in the event that Lessor shall elect to reenter as provided in Section 23.2(b) above without exercising its option to terminate the Lease, then Lessor may either recover all Rent as it becomes due (Lessor Debt Deficit and Participation Rent shall be calculated for the month or months after the Leased Premises are vacated or abandoned by Lessee as the average Lessor Debt Deficit and Participation Rent paid during the last Lease Year prior to the vacation or abandonment of the Leased Premises by Lessee) or relet for Lessor's benefit the Leased Premises or any part thereof for such term or terms and at such rental or rentals and upon such other terms and conditions as Lessor in its sole discretion may deem advisable and, in connection therewith, Lessor shall have the right to make alterations and repairs to the Leased Premises. In the event that Lessor shall so elect to relet, then rentals received by Lessor from such reletting shall be applied: first, to the payment of any indebtedness owing by Lessee to Lessor other than Rent due hereunder; second, to the payment of the cost of such reletting; third, to the payment of the cost of any alterations and repairs to the Leased Premises made by Lessor; fourth, to the

payment of Rent due and unpaid hereunder; and the residue, if any, shall be held by Lessor and applied in payment of future Rent as the same may become due and payable hereunder. Should that portion of such rentals received from such reletting during any month which is applied to the payment of Rent hereunder be less than the Rent payable during that month by Lessee hereunder, then Lessee shall pay such deficiency to Lessor. Such deficiency shall be calculated and paid monthly. Lessee shall also pay to Lessor, as soon as ascertained, any costs and expenses incurred by Lessor in such reletting or in making such alterations and repairs not covered by the rentals received from such reletting.

23.2(d) Effect of Reentry. No reentry or taking possession of the Leased Premises by Lessor pursuant to Section 23.2(b) shall be construed as an election to terminate this Lease unless a written notice of such intention be given to Lessee by Lessor or unless the termination thereof be decreed by a court of competent jurisdiction. Lessor may at any time after such reletting elect to terminate this Lease for any Lessee Event of Default and may thereafter pursue any and all remedies available to Lessor upon such termination.

23.2(e) Default Interest. If either party at any time by reason of the other party's default pays any sum or does any act that requires payment of any sum, the sum paid by the non-defaulting party shall be immediately due and owing by the defaulting party to the non-defaulting party at the time the sum is paid, and if paid at a later date shall bear interest at the prime rate of interest announced from time-to-time by Nations Bank, N.A. plus two percent (2%) from the date the sum is paid by the non-defaulting party until the non-defaulting party is reimbursed by the defaulting party.

23.2(f) Attorneys' Fees. If either Lessor or Lessee should bring an action in a court of law to enforce any of its rights or remedies under this Lease, both parties agree that the prevailing party in any such litigation shall be entitled to a recovery of reasonable attorneys' fees and costs incurred by way of such action.

23.2(g) Remedies Cumulative. Each right and remedy of Lessor provided for in this Lease shall be cumulative and shall be in addition to every other right or remedy provided for in this Lease or now or hereafter existing at law or in equity or by statute or otherwise shall not preclude the simultaneous or later

exercise by Lessor of any or all other rights or remedies provided for in this Lease or now or hereafter existing at law or in equity or by statute or otherwise.

23.2(h) Lessee's Remedies. If any of the conditions applicable to Lessor identified in Section 23.1 above should occur and Lessor does not cure the default, Lessee may seek all remedies available to Lessee under this Lease, at law and/or in equity; provided, however, that Lessee shall have no right to terminate this Lease as a result of such default except as otherwise expressly provided in this Lease.

24. RIGHT OF FIRST OFFER. Before selling or transferring Lessor's fee interest in the Leased Premises to a third party, Lessor shall first deliver a written notice ("Offer Notice") to Lessee which sets forth the terms and conditions upon which Lessor is willing to sell the Leased Premises. Thereafter, Lessee (or an affiliate of Lessee, including, without limitation, National Golf Operating Partnership L.P. ("NGP"), and any partnership in which NGP is a partner) shall have a period of thirty (30) days from receipt of Lessor's Notice within which to agree to purchase Lessor's fee interest in the Leased Premises on the terms and conditions set forth in such Offer Notice. If Lessee fails to provide timely written notice of Lessee's agreement to purchase the Leased Premises on the terms and conditions set forth in the Offer Notice, then, for a period of eight (8) months thereafter, Lessor may sell its fee interest in the Leased Premises to a bona fide third party purchaser upon the terms and conditions set forth in the Offer Notice, or upon terms and conditions which are more favorable to Lessor, other than the purchase price, which shall be not less than ninety percent (90%) of the purchase price set forth in the Offer Notice. If such a sale is not consummated within eight (8) months after the expiration of Lessee's thirty (30) day response period, or if Lessor desires to agree to a sale which is less favorable to Lessor (for example, among other things, Lessor desires to agree to a lower purchase price or a combination of a lower cash payment and a correspondingly higher level of purchase money financing), then prior to accepting a bona fide offer and selling its fee interest in the Leased Premises, Lessor must once again deliver an Offer Notice to Lessee and the procedures set forth in this Article 24 shall once again apply. If Lessee gives timely notice of its acceptance of the terms and conditions set forth in an Offer Notice, then, Lessor and Lessee shall promptly enter into an agreement on the terms and conditions set forth in the Offer Notice and such other terms and conditions to which

Lessor and Lessee agree. For purposes hereof, a contract to sell or transfer, or selling or transferring, shares constituting a controlling interest in Lessor shall be treated the same as a contract to sell or transfer, or selling or transferring, Lessor's fee interest in the Leased Premises which triggers the provisions of this Article 24. During the term of this Lease, Lessor may not accept an offer which is not a bona fide offer. An offer is a "bona fide offer" for purposes of this Article 24 if it is an offer to purchase the entire Leased Premises made by a party who is unaffiliated with Lessor (i.e., is not controlled by, is not under control with, or does not control any individual or entity constituting or having an interest in Lessor), and who has the financial capacity necessary in order to consummate the purchase of the Leased Premises in accordance with the terms of such offer. Without limiting the foregoing, Lessor may not accept an offer which covers less than the entire Leased Premises. Any attempt to accept an offer which is not a bona fide offer or which does not otherwise comply with the requirements set forth herein shall be a breach of Lessor's obligations hereunder and, at Lessee's election, shall be null and void. Once Lessor sells its fee interest in the Leased Premises pursuant to the provisions hereof to a bona fide third party purchaser, Lessee's right of first refusal shall be null and void. Without in any way limiting the provisions of the preceding sentence, if Lessor sells its fee interest in the Leased Premises to a party affiliated with or controlled by Lessor, then the provisions of this Article 24 shall remain in full force and effect.

25. QUIET ENJOYMENT. Subject only to the terms of this Lease, so long as Lessee complies with its obligations under this Lease, Lessor shall secure to Lessee the quiet and peaceful enjoyment of the Leased Premises and the sole and exclusive possession of the Leased Premises without objection or interference from Lessor or any party claiming under Lessor.

26. GENERAL PROVISIONS.

26.1 Entire Agreement. This Lease contains all of the agreements of the parties with respect to the matters covered by this Lease, and no prior agreements, oral or written, or understandings or representations of any nature whatsoever pertaining to any such matters shall be effective for any purpose unless expressly incorporated in the provisions of this Lease. The provisions of this Lease shall not be amended or altered except by an agreement in writing signed by both of the parties.

26.2 Waiver. Waiver by either Lessor or Lessee of any breach by the other of any covenant, condition or obligation contained in this Lease or failure by either Lessor or Lessee to exercise any right of remedy in respect of any such breach shall not constitute a waiver of any such breach or of any subsequent breach of any covenant, condition or obligation, nor bar any right or remedy of Lessor or Lessee in respect of any such subsequent breach.

26.3 Memorandum of Lease. Concurrently with the execution of this Lease, Lessor and Lessee agree to execute and deliver a short form memorandum of this Lease in the form of Exhibit "G" hereto which Lessee shall record in the Official Records of the County of Dallas, State of Texas. The parties further agree, however, that the memorandum shall in no way be deemed or interpreted to amend, change, define, explain or add to the provisions of this Lease.

26.4 Time is of the Essence. Time is of the essence with respect to the performance or observance of each of the obligations, covenants and agreements under this Lease.

26.5 Brokers. Lessor and Lessee represent to each other that they are not obligated to any broker or finders in connection with this Lease, and each party agrees to defend, indemnify and hold the other harmless from any claim, suit or demand made upon the other by any person, firm or corporation for brokerage fees or commissions or other similar compensation with respect to this Lease.

26.6 Notices and Addresses. All notices, demands, requests or replies provided for or permitted by this Lease shall be in writing and may be delivered by any one of the following methods: (1) by personal delivery with receipt acknowledged in writing; (2) by deposit with the United States Postal Service as certified or registered mail, return receipt requested, postage prepaid to the addresses stated below; or (3) by deposit with an overnight express delivery service with receipt acknowledged in writing. Notice deposited with the United States Postal Service in the manner described above shall be deemed effective three (3) business days after deposit with the Postal Service. Notice by overnight express delivery service shall be deemed effective one (1) business day after deposit with the express delivery service. Notice by personal delivery shall be deemed effective at the time of personal delivery. Notice also may be given by means of

electronic facsimile transmission ("fax"); provided, however, that in order for a fax notice to be deemed effective, the party giving notice by fax shall provide a "hard copy" of the faxed notice thereafter to the other party pursuant to one of the three (3) methods of "hard copy" delivery specified in this Section.

For purposes of notice, demand, request, reply or payment, the address of Lessor shall be:

City of Rowlett
P.O. Box 99
Rowlett, Texas
Attn: City Manager
Fax: (972) 412-6228

with a courtesy copy to:

Cowles & Thompson, P.C.
901 Main Street
Suite 4000
Dallas, TX 75202-3793
Fax: (214) 672-2020

The address of Lessee shall be:

American Golf Corporation
2951 28th Street, Suite 3000
Santa Monica, California 90405
Attention: Legal Department
Fax: (310) 664-6165

Each party shall have the right to designate a different address within the United States of America by the giving of notice in conformity with this Article.

26.7 Governing Law; Venue; Partial Invalidity. This Lease and the rights and liabilities of the parties to the Lease shall be governed by the laws of the State of Texas. Venue for all disputes between Lessor and Lessee arising out of this Lease shall be in Dallas County, Texas. If any term or provision of this Lease or application of the Lease to any person or circumstance shall to any extent be invalid or unenforceable, the remainder of this Lease, or the application of such term or provision to persons or circumstances other than those as to which it is invalid or unenforceable, shall not be affected by such invalidity or

unenforceability, and each term and provision of this Lease shall be valid and be enforced to the fullest extent permitted by law.

26.8 [Intentionally deleted.]

26.9 Holding Over. If Lessee does not vacate the Leased Premises upon the expiration or earlier termination of the Lease, Lessee's occupancy of the Leased Premises shall be a "month-to-month" tenancy, subject to all the terms of this Lease applicable to a month-to-month tenancy, except that Monthly Minimum Rent payable by Lessee shall be increased to one hundred fifty percent (150%) of the Monthly Minimum Rent in effect immediately prior to said expiration or termination.

26.10 Estoppel Certificates. Upon Lessor's or Lessee's written request, the other party shall execute, acknowledge and deliver to the requesting party, a written statement certifying: (a) that none of the terms or provisions of this Lease have changed (or if they have been changed, stating how they have been changed); (b) that this Lease has not been cancelled or terminated; (c) the last date of payment of the Minimum Rent and other charges and the time period covered by such payments; and (d) that the other party is not, to the best of the certifying party's knowledge, in default under this Lease (or, if the other party is claimed to be in default, stating why). Such party shall deliver such statement to the requesting party within ten (10) days after the requesting party's request. Any such statement may be given by the requesting party to any prospective purchaser or encumbrancer of Lessor or Lessee's interest in this Lease.

26.11 Nondisturbance Agreements. As a covenant on the part of Lessor and as a condition to Lessee's obligations under this Lease, Lessor shall, concurrently with the execution of this Lease, deliver to Lessee a nondisturbance agreement, in form and content reasonably acceptable to Lessee ("Non-Disturbance Agreement") executed by all current ground lessors, mortgage holders and deed of trust beneficiaries of the Leased Premises. Such Non-Disturbance Agreement shall provide, among other things, that if Lessor's interest in the Leased Premises is acquired by any ground lessor, mortgagee or beneficiary under a deed of trust or a purchaser at a foreclosure sale, Lessee shall not be deprived of its rights under this Lease and Lessee's right to quiet possession of the Leased Premises shall not be disturbed as long as Lessee pays rent and performs its obligations under this Lease. If Lessor fails to deliver to Lessee an acceptable Non-Disturbance Agreement

from each and every current ground lessor, mortgagee and beneficiary under each deed of trust encumbering the Leased Premises, then, without in any way limiting any other rights or remedies Lessee may have as a result thereof, Lessee may, but shall not be required to, terminate this Lease upon written notice to Lessor at any time thereafter. In addition, Lessee shall subordinate this Lease to the lien of all current and future mortgage holders and deed of trust beneficiaries so long as, concurrently therewith, such mortgage holders and deed of trust beneficiaries execute a Non-Disturbance Agreement in favor of Lessee. Lessor shall punctually perform all of its obligations arising under the Refunding and New Money Debt Service Series 1999 Bonds, the Series 1999 New Money Bonds and under any and all other indebtedness incurred and/or to be incurred by Lessor in connection with the Leased Premises.

26.12 Captions. Captions in this Lease are included for convenience only and are not to be taken into consideration in any construction or interpretation of this Lease or any of its provisions.

26.13 Exhibits. The Exhibits and Schedule referred to below and attached to this Lease are incorporated herein as if set forth in full:

Exhibit "A" - Legal Description of Real Property

Exhibit "B" - Schedule of Personal Property

Exhibit "C" - Commencement Date Confirmation Notice

Exhibit "D" - Golf Course Completion Items

Exhibit "E" - Plans for Remaining Work

Exhibit "F" - Maintenance Standards

Exhibit "G" - Memorandum of Lease

Exhibit "H" - Development Parcel

Exhibit "I" - Golf Play Easement

Schedule 6.1(a) - Fixed Minimum Rent

Schedule 6.1(b) - Additional Minimum Rent

Schedule 6.6 - Bond Schedules

26.14 Further Assurances. Lessor and Lessee agree that at any time or from time to time after the execution of this Lease, they shall, upon request of the other, execute and deliver such further documents and do such further acts and things as may be reasonable requested in order to fully effect the purpose of this Lease.

26.15 No Joint Venture. Nothing contained in this Lease shall be deemed or construed by the parties hereto or by any third party as creating the relationship of principal and agent, a partnership or joint ventures between Lessor and Lessee. It is understood and agreed that neither any provisions contained in this Lease nor any acts of Lessor or Lessee shall be deemed to create any relationship between Lessor and Lessee other than the relationship of landlord and tenant.

26.16 No Interpretation Against Draftsman. Lessor and Lessee hereby agree that no provision of this Lease shall be construed against either Lessee or Lessor on the basis that the provision was drafted by such party or such party's counsel.

27. RESIDENTIAL DEVELOPMENT. Lessor and Lessee hereby acknowledge that the Real Property is adjacent to a parcel ("Development Parcel") on which the owner thereof intends to construct a high-end residential development, which Development Parcel is more particularly depicted on Exhibit "H" attached hereto. Lessor shall have the right, subject to the provisions of this Article 27, to permit the owner of the Development Parcel to develop and/or sell portions of the Development Parcel to one or more third parties to be used solely for the construction of a single-family residential development and associated amenities, utilities, facilities and improvements, so long as the development will not (i) materially adversely affect the Leased Premises or Lessee's operation of the Leased Premises; or (ii) result in set-back or buffer areas that extend less than fifty (50) feet from the "in-play" area of the golf course, provided that such set-back or buffer areas may extend less than fifty (50) feet from the "in-play" area of the golf course only in such areas and by such distance as is specifically permitted in the Planned Unit Development heretofore issued by Lessor with respect to the Development Parcel. Lessor shall cause all drainage from the

Development Parcel onto the Leased Premises to be pursuant to plans and specifications approved in advance and in writing by Lessee, which approval Lessee shall not unreasonably withhold or delay. Lessor hereby further agrees that Lessor shall cause the Development Parcel to be legally encumbered by one or more documents in form and substance approved in advance and in writing by Lessee, which approval Lessee shall not unreasonably withhold, which contain, among other things, (a) Lessee's standard golf play easement, a copy of which is attached hereto as Exhibit "I"; and (b) restrictions requiring all improvements constructed in the residential development to be set back at such distances as are described above.

28. NONDISCRIMINATION. Lessee, for itself, its successors and assigns and all persons claiming under or through it, covenants that there shall be no discrimination against or segregation of any person or group of persons on account of race, color, creed, religion, sex marital status, national origin or ancestry, in the operation, subleasing, transferring, occupancy, tenure or enjoyment of the Leased Premises, nor shall Lessee or any person claiming under or through it, establish or permit any practice or practices of discrimination or segregation with reference to the selection, location, number, use or occupancy, of tenants, licensees, employees or vendees in the Leased Premises or the improvements thereon. Lessee further covenants to comply with all State and Federal nondiscrimination laws now or hereafter in effect. The foregoing covenants shall run with the leasehold. All records, including, without limitation, employment records, shall be open for inspection and reinspection by the Lessor at any reasonable time during the terms of this Lease Agreement for the purpose of verifying the practice of nondiscrimination by Lessee in the areas heretofore described. Lessee, for itself, its successors and assigns and all persons claiming under or through it, covenants that there shall be no discrimination against or segregation of any person or group of persons on account of race, color, creed, religion, sex, martial status, national origin or ancestry in the construction of any improvements on the Leased Premises.

29. EASEMENTS. Lessor may establish, grant or utilize easements or rights of way over, under, along and across the Leased Premises, provided that Lessor obtains Lessee's prior written consent thereto, which consent Lessee shall not unreasonably withhold so long as the establishment, granting and/or use of the easements and/or rights of way will not (i) interfere with the operations to be conducted hereunder; (ii) impact any greens or tee

Exhibit "A"
Legal Description of Real Property

FIELD NOTES
GOLF COURSE TRACT NO. 1

BEING A 77.700 ACRE TRACT OF LAND SITUATED IN THE J. HAMILTON SURVEY, ABSTRACT NO. 544, DALLAS COUNTY, TEXAS AND BEING A PART OF TRACT E AND TRACT F AS DESCRIBED IN A DEED TO ROWLETT PRINCETON PARK, L.P., AND RECORDED IN VOLUME 93117, PAGE 2370 OF THE DEED RECORDS OF DALLAS COUNTY, TEXAS (D.R.D.C.T.), ALSO BEING A PART OF YEAGER ROAD (FORMERLY ROWLETT - LIBERTY GROVE ROAD NO. 278) CONVEYED AND DEDICATED TO DALLAS COUNTY. SAID 77.700 ACRE TRACT BEING MORE PARTICULARLY DESCRIBED BY METES AND BOUNDS AS FOLLOWS:

BEGINNING AT A 1/2" IRON ROD FOUND FOR THE MOST WESTERLY NORTHWEST CORNER OF SAID TRACT F, ALSO BEING ON THE SOUTHEAST LINE OF A 8.296 ACRE TRACT DESCRIBED IN A DEED TO THE CITY OF ROWLETT AND RECORDED IN VOLUME 92187, PAGE 3315, D.R.D.C.T.;

THENCE N 44°21'52" E, WITH THE SOUTHEAST LINE OF SAID 8.296 ACRE TRACT, A DISTANCE OF 3565.25 FEET;

THENCE OVER AND ACROSS SAID TRACT E, TRACT F AND YEAGER ROAD, THE FOLLOWING CALLS:

S 45°00'00" E, A DISTANCE OF 50.00 FEET;

S 44°21'52" W, A DISTANCE OF 115.01 FEET;

S 45°00'00" E, A DISTANCE OF 208.11 FEET;

SOUTHWESTERLY, ALONG A CURVE TO THE RIGHT HAVING A RADIUS OF 170.00 FEET, A DELTA ANGLE OF 82°02'34", A LONG CHORD THAT BEARS S 17°54'36" W A DISTANCE OF 223.16 FEET, AN ARC DISTANCE OF 243.43 FEET;

S 58°55'53" W, A DISTANCE OF 479.02 FEET;

SOUTHWESTERLY, ALONG A CURVE TO THE RIGHT HAVING A RADIUS OF 170.00 FEET, A DELTA ANGLE OF 65°30'20", A LONG CHORD THAT BEARS S 03°43'52" W A DISTANCE OF 183.95 FEET, AN ARC DISTANCE OF 194.36 FEET;

S 36°29'02" W, A DISTANCE OF 284.30 FEET;

SOUTHWESTERLY, ALONG A CURVE TO THE RIGHT HAVING A RADIUS OF 190.00 FEET, A DELTA ANGLE OF 07°03'49", A LONG CHORD THAT BEARS - S 40°00'56" W A DISTANCE OF 23.41 FEET, AN ARC DISTANCE OF 23.42 FEET;

S 43°32'51" W, A DISTANCE OF 699.93 FEET;

SOUTHWESTERLY, ALONG A CURVE TO THE RIGHT HAVING A RADIUS OF 200.00 FEET, A DELTA ANGLE OF 13°18'41", A LONG CHORD THAT BEARS S 50°12'11" W A DISTANCE OF 46.36 FEET, AN ARC DISTANCE OF 46.47 FEET;

S 56°51'32" W, A DISTANCE OF 743.26 FEET;

S 56°15'37" E, A DISTANCE OF 230.08 FEET;

SOUTHEASTERLY, ALONG A CURVE TO THE RIGHT HAVING A RADIUS OF 200.00 FEET, A DELTA ANGLE OF 17°59'30", A LONG CHORD THAT BEARS S 47°15'52" E A DISTANCE OF 62.54 FEET, AN ARC DISTANCE OF 62.80 FEET;

S 38°16'07" E, A DISTANCE OF 466.86 FEET;

NORTHEASTERLY, ALONG A CURVE TO THE RIGHT HAVING A RADIUS OF 160.00 FEET, A DELTA ANGLE OF 30°04'05", A LONG CHORD THAT BEARS N 27°18'43" E A DISTANCE OF 83.01 FEET, AN ARC DISTANCE OF 83.97 FEET;

N 42°20'45" E, A DISTANCE OF 554.38 FEET;

N 45°21'50" E, A DISTANCE OF 800.73 FEET;

SOUTHEASTERLY, ALONG A CURVE TO THE RIGHT HAVING A RADIUS OF 100.00 FEET, A DELTA ANGLE OF 95°17'30", A LONG CHORD THAT BEARS S 86°59'25" E A DISTANCE OF 147.80 FEET, AN ARC DISTANCE OF 166.32 FEET;

N 50°39'20" E, A DISTANCE OF 30.75 FEET;

NORTHEASTERLY, ALONG A CURVE TO THE LEFT HAVING A RADIUS OF 100.00 FEET, A DELTA ANGLE OF 31°50'24", A LONG CHORD THAT BEARS N 34°44'08" E A DISTANCE OF 54.86 FEET, AN ARC DISTANCE OF 55.57 FEET;

N 18°48'56" E, A DISTANCE OF 99.03 FEET;

S 71°11'04" E, A DISTANCE OF 20.00 FEET;

S 18°48'56" W, A DISTANCE OF 99.03 FEET;

SOUTHWESTERLY, ALONG A CURVE TO THE RIGHT HAVING A RADIUS OF 120.00 FEET, A DELTA ANGLE OF 31°50'24", A LONG CHORD THAT BEARS S 34°44'08" W A DISTANCE OF 65.83 FEET, AN ARC DISTANCE OF 66.69 FEET;

S 50°39'20" W, A DISTANCE OF 32.77 FEET;

SOUTHWESTERLY, ALONG A CURVE TO THE RIGHT HAVING A RADIUS OF 100.00 FEET, A DELTA ANGLE OF 61°41'35", A LONG CHORD THAT BEARS S 03°02'20" W A DISTANCE OF 102.55 FEET, AN ARC DISTANCE OF 107.67 FEET;

S 33°53'08" W, A DISTANCE OF 795.99 FEET;

SOUTHWESTERLY, ALONG A CURVE TO THE RIGHT HAVING A RADIUS OF 180.00 FEET, A DELTA ANGLE OF 12°37'42", A LONG CHORD THAT BEARS S 40°11'59" W A DISTANCE OF 39.59 FEET, AN ARC DISTANCE OF 39.67 FEET;

S 46°30'50" W, A DISTANCE OF 107.34 FEET;

SOUTHWESTERLY, ALONG A CURVE TO THE LEFT HAVING A RADIUS OF 450.00 FEET, A DELTA ANGLE OF 31°54'57", A LONG CHORD THAT BEARS S 02°59'25" W A DISTANCE OF 247.44 FEET, AN ARC DISTANCE OF 250.67 FEET;

S 78°20'29" E, A DISTANCE OF 205.01 FEET;

SOUTHWESTERLY, ALONG A CURVE TO THE LEFT HAVING A RADIUS OF 1180.00 FEET, A DELTA ANGLE OF 03°04'28", A LONG CHORD THAT BEARS S 09°34'49" W A DISTANCE OF 63.31 FEET, AN ARC DISTANCE OF 63.32 FEET;

S 13°35'08" W, A DISTANCE OF 103.79 FEET;

SOUTHEASTERLY, ALONG A CURVE TO THE LEFT HAVING A RADIUS OF 1194.50 FEET, A DELTA ANGLE OF 11°26'32", A LONG CHORD THAT BEARS S 02°38'22" E A DISTANCE OF 238.15 FEET, AN ARC DISTANCE OF 238.55 FEET;

S 82°04'54" W, A DISTANCE OF 125.79 FEET;

NORTHWESTERLY, ALONG A CURVE TO THE RIGHT HAVING A RADIUS OF 100.00 FEET, A DELTA ANGLE OF 56°58'02", A LONG CHORD THAT BEARS N 69°26'06" W A DISTANCE OF 95.38 FEET, AN ARC DISTANCE OF 99.43 FEET;

SOUTHWESTERLY, ALONG A CURVE TO THE LEFT HAVING A RADIUS OF 175.00 FEET, A DELTA ANGLE OF 98°56'41", A LONG CHORD THAT BEARS S 89°34'34" W A DISTANCE OF 266.03 FEET, AN ARC DISTANCE OF 302.21 FEET;

S 40°06'13" W, A DISTANCE OF 175.12 FEET;

S 49°47'12" E, A DISTANCE OF 392.62 FEET;

SOUTHEASTERLY, ALONG A CURVE TO THE RIGHT HAVING A RADIUS OF 100.00 FEET, A DELTA ANGLE OF 42°20'34", A LONG CHORD THAT BEARS S 28°36'55" E A DISTANCE OF 72.23 FEET, AN ARC DISTANCE OF 73.90 FEET;

S 07°26'37" E, A DISTANCE OF 295.96 FEET;

SOUTHWESTERLY, ALONG A CURVE TO THE RIGHT HAVING A RADIUS OF 150.00 FEET, A DELTA ANGLE OF 65°24'29", A LONG CHORD THAT BEARS S 25°15'37" W A DISTANCE OF 162.09 FEET, AN ARC DISTANCE OF 171.24 FEET;

S 44°45'40" E, A DISTANCE OF 128.49 FEET;

S 45°14'20" W, A DISTANCE OF 20.84 FEET;

SOUTHEASTERLY, ALONG A CURVE TO THE LEFT HAVING A RADIUS OF 50.00 FEET, A DELTA ANGLE OF 179°03'18", A LONG CHORD THAT BEARS S 00°14'00" E A DISTANCE OF 100.00 FEET, AN ARC DISTANCE OF 156.25 FEET;

S 45°06'29" E, A DISTANCE OF 57.76 FEET;

S 45°14'20" W, A DISTANCE OF 130.00 FEET TO THE SOUTHWEST LINE OF SAID TRACT E;

THENCE N 45°06'29" W, WITH THE SOUTHWEST LINE OF SAID TRACT E. A DISTANCE OF 1240.94 FEET TO A 1/2" IRON ROD FOUND;

THENCE NORTHWESTERLY, ALONG A CURVE TO THE RIGHT HAVING A RADIUS OF 125.59 FEET, A DELTA ANGLE OF 43°08'20", A LONG CHORD THAT BEARS

N 23°33'15" W A DISTANCE OF 92.34 FEET, AN ARC DISTANCE OF 94.56 FEET;

THENCE N 45°02'57" W, AT A DISTANCE OF 105.39 FEET, PASSING A 1/2" IRON ROD FOUND FOR THE SOUTH CORNER OF SAID TRACT F, AND CONTINUING FOR A TOTAL DISTANCE OF 1239.24 FEET TO THE POINT OF BEGINNING, AND CONTAINING 77.700 ACRES OF LAND, MORE OR LESS.

STATE OF TEXAS
REGISTERED
WILLIAM C. ESSEX
1962
PROFESSIONAL
LAND SURVEYOR

10-7-97

SURVEYED MAY - JUNE 1997.

BEARINGS ARE BASED ON GEODETIC NORTH.

A BOUNDARY EXHIBIT OF EVEN SURVEY DATE ACCOMPANIES THIS LEGAL DESCRIPTION.

FIELD NOTES
GOLF COURSE TRACT NO. 2

BEING A 48.085 ACRE TRACT OF LAND SITUATED IN THE H. MASTERS SURVEY, ABSTRACT NO. 858, DALLAS COUNTY, TEXAS AND BEING A PART OF TRACT E AND TRACT F AS DESCRIBED IN A DEED TO ROWLETT PRINCETON PARK, L.P., AND RECORDED IN VOLUME 93117, PAGE 2370 OF THE DEED RECORDS OF DALLAS COUNTY, TEXAS (D.R.D.C.T.), ALSO A PART OF PRINCETON PARKWAY AS SHOWN IN THE FINAL PLAT RECORDED IN VOLUME 86146, PAGE 568, D.R.D.C.T., AND ALSO BEING A PART OF YEAGER ROAD (FORMERLY ROWLETT - LIBERTY GROVE ROAD NO. 278) AS CONVEYED AND DEDICATED TO DALLAS COUNTY. SAID 48.085 ACRE TRACT BEING MORE PARTICULARLY DESCRIBED BY METES AND BOUNDS AS FOLLOWS:

BEGINNING AT A 1/2" IRON ROD FOUND FOR THE MOST NORTHERLY NORTHWEST CORNER OF SAID TRACT F, ALSO BEING THE SOUTHEAST CORNER OF A 11.854 ACRE TRACT OF LAND DESCRIBED IN A DEED TO THE CITY OF GARLAND AND RECORDED IN VOLUME 90225, PAGE 1766, D.R.D.C.T.;

THENCE N 45°09'23" E, WITH THE SOUTHEAST LINE OF SAID 11.854 ACRE TRACT, A DISTANCE OF 1521.01 FEET TO A POINT FROM WHICH A 1/2" IRON ROD FOUND BEARS N 45°09'23 E, A DISTANCE OF 1060.65 FEET TO THE NORTH CORNER OF SAID TRACT F;

THENCE OVER AND ACROSS SAID TRACT E, TRACT F, PRINCETON PARKWAY AND YEAGER ROAD, THE FOLLOWING CALLS:

S 59°58'17" E, A DISTANCE OF 928.63 FEET;

SOUTHEASTERLY, ALONG A CURVE TO THE RIGHT HAVING A RADIUS OF 200.00 FEET, A DELTA ANGLE OF 19°09'52", A LONG CHORD THAT BEARS S 50°23'21" E A DISTANCE OF 66.59 FEET, AN ARC DISTANCE OF 66.90 FEET;

S 40°48'25" E, A DISTANCE OF 699.58 FEET;

S 40°39'13" E, A DISTANCE OF 135.23 FEET;

SOUTHEASTERLY, ALONG A CURVE TO THE RIGHT HAVING A RADIUS OF 170.00 FEET, A DELTA ANGLE OF 44°22'42", A LONG CHORD THAT BEARS S 18°27'52" E A DISTANCE OF 128.41 FEET, AN ARC DISTANCE OF 131.67 FEET;

SOUTHEASTERLY, ALONG A CURVE TO THE RIGHT HAVING A RADIUS OF 110.00 FEET, A DELTA ANGLE OF 123°59'26", A LONG CHORD THAT BEARS S 22°52'26" E A DISTANCE OF 194.24 FEET, AN ARC DISTANCE OF 238.04 FEET;

S 39°07'16" W, A DISTANCE OF 785.12 FEET;

S 33°30'26" W, A DISTANCE OF 599.68 FEET;

SOUTHWESTERLY, ALONG A CURVE TO THE RIGHT HAVING A RADIUS OF 175.00 FEET, A DELTA ANGLE OF 55°22'32", A LONG CHORD THAT BEARS S 61°11'41" W A DISTANCE OF 162.63 FEET, AN ARC DISTANCE OF 169.13 FEET;

S 37°13'16" W, A DISTANCE OF 107.03 FEET;

NORTHWESTERLY, ALONG A CURVE TO THE LEFT HAVING A RADIUS OF 325.00 FEET, A DELTA ANGLE OF 23°31'06", A LONG CHORD THAT BEARS N 33°14'27" W A DISTANCE OF 132.47 FEET, AN ARC DISTANCE OF 133.40 FEET;

N 45°00'00" W, A DISTANCE OF 103.56 FEET;

N 17°21'46" E, A DISTANCE OF 152.06 FEET;

N 28°48'34" E, A DISTANCE OF 627.03 FEET;

NORTHEASTERLY, ALONG A CURVE TO THE RIGHT HAVING A RADIUS OF 200.00 FEET, A DELTA ANGLE OF 23°13'51", A LONG CHORD THAT BEARS N 40°25'29" E A DISTANCE OF 80.54 FEET, AN ARC DISTANCE OF 81.09 FEET;

N 52°02'25" E, A DISTANCE OF 594.96 FEET;

NORTHWESTERLY, ALONG A CURVE TO THE RIGHT HAVING A RADIUS OF 170.00 FEET, A DELTA ANGLE OF 26°40'46", A LONG CHORD THAT BEARS N 53°59'36" W A DISTANCE OF 78.45 FEET, AN ARC DISTANCE OF 79.16 FEET;

N 40°39'13" W, A DISTANCE OF 127.48 FEET;

N 45°43'10" W, A DISTANCE OF 689.51 FEET;

N 47°03'09" W, A DISTANCE OF 584.56 FEET;

S 45°33'31" W, A DISTANCE OF 460.87 FEET;

SOUTHWESTERLY, ALONG A CURVE TO THE RIGHT HAVING A RADIUS OF 170.00 FEET, A DELTA ANGLE OF 06°46'50", A LONG CHORD THAT BEARS S 48°56'55" W A DISTANCE OF 20.11 FEET, AN ARC DISTANCE OF 20.12 FEET;

S 52°20'20" W, A DISTANCE OF 522.61 FEET;

S 45°09'23" W, A DISTANCE OF 53.35 FEET;

S 52°23'00" E, A DISTANCE OF 440.24 FEET;

SOUTHEASTERLY, ALONG A CURVE TO THE RIGHT HAVING A RADIUS OF 200.00 FEET, A DELTA ANGLE OF 16°50'35", A LONG CHORD THAT BEARS S 43°57'43" E A DISTANCE OF 58.58 FEET, AN ARC DISTANCE OF 58.79 FEET;

S 35°32'25" E, A DISTANCE OF 764.10 FEET;

SOUTHWESTERLY, ALONG A CURVE TO THE RIGHT HAVING A RADIUS OF 110.00 FEET, A DELTA ANGLE OF 109°35'05", A LONG CHORD THAT BEARS S 19°15'07" W A DISTANCE OF 179.76 FEET, AN ARC DISTANCE OF 210.39 FEET;

S 74°02'40" W, A DISTANCE OF 103.94 FEET;

N 45°00'00" W, A DISTANCE OF 251.76 FEET;

NORTHWESTERLY, ALONG A CURVE TO THE LEFT HAVING A RADIUS OF 285.00 FEET, A DELTA ANGLE OF 15°10'54", A LONG CHORD THAT BEARS N 63°20'20" W A DISTANCE OF 75.30 FEET, AN ARC DISTANCE OF 75.52 FEET TO A POINT ON THE NORTHEAST LINE OF TRACT "C" AS DESCRIBED IN A DEED TO THE CITY OF ROWLETT AND RECORDED IN VOLUME 90088, PAGE 24, D.R.D.C.T.;

THENCE N 44°58'28" W, WITH THE NORTHEAST LINE OF SAID TRACT "C" AND THE NORTHEAST LINE OF TRACT "A" AS DESCRIBED IN A DEED TO THE CITY OF ROWLETT AND RECORDED IN VOLUME 90088, PAGE 29, D.R.D.C.T., A DISTANCE OF 1199.04 FEET TO A 1/2" IRON ROD FOUND;

THENCE N 43°38'14" E, DEPARTING THE NORTHEAST LINE OF SAID TRACT "A", A DISTANCE OF 52.00 FEET;

THENCE N 45°12'46" W, A DISTANCE OF 53.80 FEET TO THE POINT OF BEGINNING, AND CONTAINING 48.085 ACRES OF LAND, MORE OR LESS.

STATE OF TEXAS
REGISTERED
WILLIAM C. BODEN
1972
PROFESSIONAL
LAND SURVEYOR

SURVEYED MAY - JUNE 1997.

BEARINGS ARE BASED ON GEODETIC NORTH.

A BOUNDARY EXHIBIT OF EVEN SURVEY DATE ACCOMPANIES THIS LEGAL DESCRIPTION.

FIELD NOTES
GOLF COURSE TRACT NO. 3

BEING A 5.350 ACRE TRACT OF LAND SITUATED IN THE J. HAMILTON SURVEY, ABSTRACT NO. 544, DALLAS COUNTY, TEXAS AND BEING A PART OF TRACT F AS DESCRIBED IN A DEED TO ROWLETT PRINCETON PARK, L.P., AND RECORDED IN VOLUME 93117, PAGE 2370 OF THE DEED RECORDS OF DALLAS COUNTY, TEXAS (D.R.D.C.T.), ALSO BEING A PART OF PRINCETON PARKWAY (100' R.O.W.) AS SHOWN IN THE FINAL PLAT RECORDED IN VOLUME 86146, PAGE 568, D.R.D.C.T. SAID 5.350 ACRE TRACT BEING MORE PARTICULARLY DESCRIBED BY METES AND BOUNDS AS FOLLOWS:

COMMENCING AT A 1/2" IRON ROD FOUND FOR THE SOUTH CORNER OF SAID TRACT F;

THENCE WITH THE SOUTHEAST LINE OF SAID TRACT F, THE FOLLOWING CALLS:

N 44°35'54" E, A DISTANCE OF 387.15 FEET TO A 1/2" IRON ROD FOUND;

N 47°28'26" W, A DISTANCE OF 10.11 FEET TO A 1/2" IRON ROD FOUND;

N 45°10'54" E, A DISTANCE OF 929.68 FEET TO A 1/2" IRON ROD FOUND;

S 44°50'55" E, A DISTANCE OF 10.89 FEET;

N 45°09'05" E, A DISTANCE OF 447.41 FEET TO A 5/8" IRON ROD FOUND;

N 45°51'27" E, A DISTANCE OF 1615.08 FEET TO A 5/8" IRON ROD FOUND;

N 26°53'48" W, DEPARTING SAID SOUTHEAST LINE, 398.10 FEET TO THE POINT OF BEGINNING OF THE HEREIN DESCRIBED TRACT;

THENCE OVER AND ACROSS SAID TRACT F, THE FOLLOWING CALLS:

S 33°34'34" W, A DISTANCE OF 668.97 FEET;

SOUTHWESTERLY, ALONG A CURVE TO THE RIGHT HAVING A RADIUS OF 170.00 FEET, A DELTA ANGLE OF 28°36'10", A LONG CHORD THAT BEARS S 47°52'39" W A DISTANCE OF 83.99 FEET, AN ARC DISTANCE OF 84.87 FEET;

SOUTHWESTERLY, ALONG A CURVE TO THE RIGHT HAVING A RADIUS OF 120.00 FEET, A DELTA ANGLE OF 31°38'39", A LONG CHORD THAT BEARS S 02°59'37" W A DISTANCE OF 65.44 FEET, AN ARC DISTANCE OF 66.28 FEET;

S 18°48'56" W, A DISTANCE OF 100.48 FEET;

N 71°11'04" W, A DISTANCE OF 20.00 FEET;

N 18°48'56" E, A DISTANCE OF 100.48 FEET;

NORTHEASTERLY, ALONG A CURVE TO THE LEFT HAVING A RADIUS OF 100.00 FEET, A DELTA ANGLE OF 29°17'41", A LONG CHORD THAT BEARS N 04°10'06" E A DISTANCE OF 50.57 FEET, AN ARC DISTANCE OF 51.13 FEET;

NORTHWESTERLY, ALONG A CURVE TO THE RIGHT HAVING A RADIUS OF 170.00 FEET, A DELTA ANGLE OF 158°13'45", A LONG CHORD THAT BEARS N 31°47'37" W A DISTANCE OF 333.88 FEET, AN ARC DISTANCE OF 469.47 FEET;

N 47°19'15" E, A DISTANCE OF 741.85 FEET;

SOUTHEASTERLY, ALONG A CURVE TO THE RIGHT HAVING A RADIUS OF 275.00 FEET, A DELTA ANGLE OF 19°07'04", A LONG CHORD THAT BEARS S 27°02'31" E A DISTANCE OF 91.33 FEET, AN ARC DISTANCE OF 91.76 FEET;

SOUTHEASTERLY, ALONG A CURVE TO THE LEFT HAVING A RADIUS OF 325.00 FEET, A DELTA ANGLE OF 16°19'27", A LONG CHORD THAT BEARS S 25°38'42" E A DISTANCE OF 92.28 FEET, AN ARC DISTANCE OF 92.60 FEET TO THE POINT OF BEGINNING, AND CONTAINING 5.350 ACRES OF LAND, MORE OR LESS.

STATE OF TEXAS
REGISTERED
WILLIAM C. BODEN III
1982
PROFESSIONAL
LAND SURVEYOR

10-7-97

SURVEYED MAY - JUNE 1997.

BEARINGS ARE BASED ON GEODETIC NORTH.

A BOUNDARY EXHIBIT OF EVEN SURVEY DATE ACCOMPANIES THIS LEGAL DESCRIPTION.

FIELD NOTES
GOLF COURSE TRACT NO. 4

BEING A 33.918 ACRE TRACT OF LAND SITUATED IN THE J. HAMILTON SURVEY, ABSTRACT NO. 544, DALLAS COUNTY, TEXAS, AND BEING A PART OF TRACT E AS DESCRIBED IN A DEED TO ROWLETT PRINCETON PARK, L.P., AND RECORDED IN VOLUME 93117, PAGE 2370 OF THE DEED RECORDS OF DALLAS COUNTY, TEXAS (D.R.D.C.T.), ALSO BEING A PART OF PRINCETON PARKWAY (100' R.O.W.) AS RECORDED IN VOLUME 86146, PAGE 568, D.R.D.C.T. SAID 33.918 ACRE TRACT BEING MORE PARTICULARLY DESCRIBED BY METES AND BOUNDS AS FOLLOWS:

COMMENCING AT A 1/2" IRON ROD FOUND FOR THE MOST NORTHERLY NORTHWEST CORNER OF SAID TRACT E;

THENCE WITH THE NORTHWEST LINE OF SAID TRACT E, THE FOLLOWING CALLS:

N 44°57'07" E, A DISTANCE OF 167.78 FEET;

N 44°50'55" W, A DISTANCE OF 7.00 FEET;

N 45°09'05 E, A DISTANCE OF 1503.75 FEET TO A 5/8" IRON ROD FOUND;

N 45°51'27" E, A DISTANCE OF 1614.24 FEET TO A 1/2" IRON ROD FOUND;

THENCE N 51°14'10" E, ACROSS SAID TRACT E, A DISTANCE OF 176.69 FEET TO THE POINT OF BEGINNING OF THE HEREIN DESCRIBED TRACT;

THENCE OVER AND ACROSS SAID TRACT E AND SAID PRINCETON PARKWAY, THE FOLLOWING CALLS:

THENCE ALONG A CURVE TO THE RIGHT HAVING A RADIUS OF 200.00 FEET, A DELTA ANGLE OF 14°47'43", A LONG CHORD THAT BEARS S 65°15'37" E A DISTANCE OF 51.50 FEET, AN ARC DISTANCE OF 51.64 FEET;

THENCE S 38°36'32" W, A DISTANCE OF 124.64 FEET;

THENCE ALONG A CURVE TO THE LEFT HAVING A RADIUS OF 50.00 FEET, A DELTA ANGLE OF 46°30'07", A LONG CHORD THAT BEARS S 15°21'28" W A DISTANCE OF 39.48 FEET, AN ARC DISTANCE OF 40.58 FEET;

THENCE ALONG A CURVE TO THE RIGHT HAVING A RADIUS OF 170.00 FEET, A DELTA ANGLE OF 105°56'26", A LONG CHORD THAT BEARS S 25°03'01" E A DISTANCE OF 271.43 FEET, AN ARC DISTANCE OF 314.33 FEET;

THENCE S 27°55'12" W, A DISTANCE OF 430.84 FEET;

THENCE ALONG A CURVE TO THE RIGHT HAVING A RADIUS OF 110.00 FEET, A DELTA ANGLE OF 43°34'20", A LONG CHORD THAT BEARS S 49°42'22" W A DISTANCE OF 81.65 FEET, AN ARC DISTANCE OF 83.65 FEET;

THENCE ALONG A CURVE TO THE RIGHT HAVING A RADIUS OF 180.00 FEET, A DELTA ANGLE OF 49°36'38", A LONG CHORD THAT BEARS S 03°34'31" W A DISTANCE OF 151.03 FEET, AN ARC DISTANCE OF 155.86 FEET;

THENCE S 28°22'50" W, A DISTANCE OF 606.84 FEET;

THENCE S 26°22'04" W, A DISTANCE OF 720.52 FEET;

THENCE ALONG A CURVE TO THE RIGHT HAVING A RADIUS OF 170.00 FEET, A DELTA ANGLE OF 37°54'44", A LONG CHORD THAT BEARS S 62°26'30" E A DISTANCE OF 110.45 FEET, AN ARC DISTANCE OF 112.49 FEET;

THENCE S 43°29'08" E, A DISTANCE OF 505.25 FEET;

THENCE S 51°25'35" E, A DISTANCE OF 631.03 FEET;

THENCE ALONG A CURVE TO THE RIGHT HAVING A RADIUS OF 170.00 FEET, A DELTA ANGLE OF 14°47'31", A LONG CHORD THAT BEARS N 19°01'44" E A DISTANCE OF 43.77 FEET, AN ARC DISTANCE OF 43.89 FEET;

THENCE N 26°25'29" E, A DISTANCE OF 683.00 FEET;

THENCE ALONG A CURVE TO THE RIGHT HAVING A RADIUS OF 110.00 FEET, A DELTA ANGLE OF 55°04'41", A LONG CHORD THAT BEARS N 53°57'50" E A DISTANCE OF 101.72 FEET, AN ARC DISTANCE OF 105.74 FEET;

THENCE N 10°31'52" W, A DISTANCE OF 153.04 FEET;

THENCE N 79°30'16" E, A DISTANCE OF 22.42 FEET;

THENCE ALONG A CURVE TO THE RIGHT HAVING A RADIUS OF 225.00 FEET, A DELTA ANGLE OF 04°28'52", A LONG CHORD THAT BEARS N 81°44'42" E A DISTANCE OF 17.59 FEET, AN ARC DISTANCE OF 17.60 FEET;

THENCE S 10°31'52" E, A DISTANCE OF 161.39 FEET;

THENCE ALONG A CURVE TO THE RIGHT HAVING A RADIUS OF 110.00 FEET, A DELTA ANGLE OF 93°23'30", A LONG CHORD THAT BEARS S 30°18'43" E A DISTANCE OF 160.10 FEET, AN ARC DISTANCE OF 179.30 FEET;

THENCE S 16°23'02" W, A DISTANCE OF 445.92 FEET;

THENCE S 43°32'39" E, A DISTANCE OF 145.71 FEET;

THENCE S 46°27'10" W, A DISTANCE OF 342.28 FEET;

THENCE ALONG A CURVE TO THE LEFT HAVING A RADIUS OF 1250.00 FEET, A DELTA ANGLE OF 08°41'14", A LONG CHORD THAT BEARS S 42°06'33" W A DISTANCE OF 189.34 FEET, AN ARC DISTANCE OF 189.52 FEET;

THENCE N 64°20'43" W, A DISTANCE OF 928.87 FEET;

THENCE ALONG A CURVE TO THE RIGHT HAVING A RADIUS OF 200.00 FEET, A DELTA ANGLE OF 27°28'28", A LONG CHORD THAT BEARS N 50°36'29" W A DISTANCE OF 94.99 FEET, AN ARC DISTANCE OF 95.90 FEET;

THENCE N 36°52'15" W, A DISTANCE OF 519.13 FEET;

THENCE ALONG A CURVE TO THE RIGHT HAVING A RADIUS OF 170.00 FEET, A DELTA ANGLE OF 55°57'44", A LONG CHORD THAT BEARS N 08°53'23" W A DISTANCE OF 159.52 FEET, AN ARC DISTANCE OF 166.04 FEET;

THENCE ALONG A CURVE TO THE RIGHT HAVING A RADIUS OF 110.00 FEET, A DELTA ANGLE OF 76°26'31", A LONG CHORD THAT BEARS N 21°53'16" W A DISTANCE OF 136.11 FEET, AN ARC DISTANCE OF 146.76 FEET;

THENCE N 16°19'59" E, A DISTANCE OF 797.31 FEET;

THENCE ALONG A CURVE TO THE RIGHT HAVING A RADIUS OF 180.00 FEET, A DELTA ANGLE OF 12°02'51", A LONG CHORD THAT BEARS N 22°21'24" E A DISTANCE OF 37.78 FEET, AN ARC DISTANCE OF 37.85 FEET;

THENCE N 28°22'50" E, A DISTANCE OF 610.00 FEET;

THENCE ALONG A CURVE TO THE RIGHT HAVING A RADIUS OF 180.00 FEET, A DELTA ANGLE OF 68°44'46", A LONG CHORD THAT BEARS N 62°45'13" E A DISTANCE OF 203.25 FEET, AN ARC DISTANCE OF 215.97 FEET;

THENCE N 11°18'36" E, A DISTANCE OF 0.00 FEET;

THENCE N 12°03'50" E, A DISTANCE OF 445.03 FEET;

THENCE ALONG A CURVE TO THE RIGHT HAVING A RADIUS OF 170.00 FEET, A DELTA ANGLE OF 72°50'07", A LONG CHORD THAT BEARS N 48°28'53" E A DISTANCE OF 201.85 FEET, AN ARC DISTANCE OF 216.11 FEET;

THENCE ALONG A CURVE TO THE RIGHT HAVING A RADIUS OF 100.00 FEET, A DELTA ANGLE OF 40°48'29", A LONG CHORD THAT BEARS N 18°12'18" E A DISTANCE OF 69.73

FEET, AN ARC DISTANCE OF 71.22 FEET;

THENCE N 38°36'32" E, A DISTANCE OF 112.29 FEET TO THE POINT OF BEGINNING, AND CONTAINING 33.918 ACRES OF LAND, MORE OR LESS.

STATE OF TEXAS
REGISTERED
WILLIAM C. BODEN
1962
PROFESSIONAL
LAND SURVEYOR

10-7-97

SURVEYED MAY - JUNE 1997.

BEARINGS ARE BASED ON GEODETIC NORTH.

A BOUNDARY EXHIBIT OF EVEN SURVEY DATE ACCOMPANIES THIS LEGAL DESCRIPTION.

FIELD NOTES
GOLF COURSE TRACT NO. 5

BEING A 56.443 ACRE TRACT OF LAND SITUATED IN THE J. HAMILTON SURVEY, ABSTRACT NO. 544 AND THE H. MASTERS SURVEY, ABSTRACT NO. 858, DALLAS COUNTY, TEXAS, AND BEING A PART OF TRACT E AS DESCRIBED IN A DEED TO ROWLETT PRINCETON PARK, L.P., AND RECORDED IN VOLUME 93117, PAGE 2370 OF THE DEED RECORDS OF DALLAS COUNTY, TEXAS (D.R.D.C.T.). SAID 56.443 ACRE TRACT BEING MORE PARTICULARLY DESCRIBED BY METES AND BOUNDS AS FOLLOWS:

COMMENCING AT A 1/2" IRON ROD FOUND FOR THE MOST NORTHERLY NORTHWEST CORNER OF SAID TRACT E;

THENCE WITH THE NORTHWEST LINE OF SAID TRACT E, THE FOLLOWING CALLS:

N 44°57'07" E, A DISTANCE OF 167.78 FEET;

N 44°50'55" W, A DISTANCE OF 7.00 FEET;

N 45°09'05 E, A DISTANCE OF 1503.75 FEET TO A 5/8" IRON ROD FOUND;

N 45°51'27" E, A DISTANCE OF 1614.24 FEET TO A 1/2" IRON ROD FOUND;

THENCE N 47°46'24" E, ACROSS SAID TRACT E, A DISTANCE OF 242.52 FEET TO THE POINT OF BEGINNING OF THE HEREIN DESCRIBED TRACT;

THENCE OVER AND ACROSS SAID TRACT E, THE FOLLOWING CALLS:

N 38°36'32" E, A DISTANCE OF 151.29 FEET;

NORTHEASTERLY, ALONG A CURVE TO THE RIGHT HAVING A RADIUS OF 110.00 FEET, A DELTA ANGLE OF 54°37'49", A LONG CHORD THAT BEARS N 06°41'52" E A DISTANCE OF 100.95 FEET, AN ARC DISTANCE OF 104.88 FEET;

N 34°00'46" E, A DISTANCE OF 794.92 FEET;

NORTHEASTERLY, ALONG A CURVE TO THE RIGHT HAVING A RADIUS OF 200.00 FEET, A DELTA ANGLE OF 21°18'24", A LONG CHORD THAT BEARS N 44°39'58" E A DISTANCE OF 73.95 FEET, AN ARC DISTANCE OF 74.37 FEET;

N 55°19'10" E, A DISTANCE OF 699.36 FEET;

NORTHEASTERLY, ALONG A CURVE TO THE RIGHT HAVING A RADIUS OF 170.00 FEET, A DELTA ANGLE OF 14°28'36", A LONG CHORD THAT BEARS N 62°33'28" E A DISTANCE OF 42.84 FEET, AN ARC DISTANCE OF 42.95 FEET;

N 69°47'46" E, A DISTANCE OF 75.00 FEET;

SOUTHEASTERLY,. ALONG A CURVE TO THE RIGHT HAVING A RADIUS OF 170.00 FEET, A DELTA ANGLE OF 55°44'18", A LONG CHORD THAT BEARS S 82°20'05" E A DISTANCE OF 158.93 FEET, AN ARC DISTANCE OF 165.38 FEET;

S 54°27'56" E, A DISTANCE OF 488.57 FEET;

S 56°55'43" E, A DISTANCE OF 794.57 FEET;

SOUTHEASTERLY, ALONG A CURVE TO THE RIGHT HAVING A RADIUS OF 180.00 FEET, A DELTA ANGLE OF 10°41'21", A LONG CHORD THAT BEARS S 51°35'03" E A DISTANCE OF 33.53 FEET, AN ARC DISTANCE OF 33.58 FEET;

S 46°14'22" E, A DISTANCE OF 489.90 FEET;

SOUTHWESTERLY, ALONG A CURVE TO THE RIGHT HAVING A RADIUS OF 170.00 FEET, A DELTA ANGLE OF 140°47'16", A LONG CHORD THAT BEARS S 24°09'16" W A DISTANCE OF 320.29 FEET, AN ARC DISTANCE OF 417.73 FEET;

SOUTHWESTERLY, ALONG A CURVE TO THE RIGHT HAVING A RADIUS OF 110.00 FEET, A DELTA ANGLE OF 116°55'23", A LONG CHORD THAT BEARS S 64°34'39" W A DISTANCE OF 187.50 FEET, AN ARC DISTANCE OF 224.48 FEET;

N 56°57'39" W, A DISTANCE OF 794.92 FEET;

NORTHWESTERLY, ALONG A CURVE TO THE RIGHT HAVING A RADIUS OF 200.00 FEET, A DELTA ANGLE OF 09°48'32", A LONG CHORD THAT BEARS N 52°03'23" W A DISTANCE OF 34.20 FEET, AN ARC DISTANCE OF 34.24 FEET;

N 47°09'08" W, A DISTANCE OF 111.02 FEET;

NORTHWESTERLY, ALONG A CURVE TO THE RIGHT HAVING A RADIUS OF 170.00 FEET, A DELTA ANGLE OF 34°24'37", A LONG CHORD THAT BEARS N 29°56'49" W A DISTANCE OF 100.57 FEET, AN ARC DISTANCE OF 102.10 FEET;

S 42°04'37" W, A DISTANCE OF 641.03 FEET;

S 43°27'17" W, A DISTANCE OF 702.69 FEET;

S 43°49'19" W, A DISTANCE OF 255.37 FEET;

SOUTHWESTERLY, ALONG A CURVE TO THE RIGHT HAVING A RADIUS OF 165.00 FEET, A DELTA ANGLE OF 31°06'53", A LONG CHORD THAT BEARS S 59°22'46" W A DISTANCE OF 88.51 FEET, AN ARC DISTANCE OF 89.60 FEET;

SOUTHEASTERLY, ALONG A CURVE TO THE RIGHT HAVING A RADIUS OF 110.00 FEET, A DELTA ANGLE OF 21°18'37", A LONG CHORD THAT BEARS S 04°51'02" E A DISTANCE OF 40.68 FEET, AN ARC DISTANCE OF 40.91 FEET;

S 05°48'16" W, A DISTANCE OF 790.30 FEET;

S 03°09'21" W, A DISTANCE OF 303.92 FEET;

SOUTHWESTERLY, ALONG A CURVE TO THE RIGHT HAVING A RADIUS OF 170.00 FEET, A DELTA ANGLE OF 39°29'38", A LONG CHORD THAT BEARS S 22°54'10" W A DISTANCE OF 114.87 FEET, AN ARC DISTANCE OF 117.18 FEET;

S 10°31'52" E, A DISTANCE OF 133.66 FEET;

SOUTHWESTERLY, ALONG A CURVE TO THE LEFT HAVING A RADIUS OF 200.00 FEET, A DELTA ANGLE OF 11°31'33", A LONG CHORD THAT BEARS S 74°16'06" W A DISTANCE OF 40.17 FEET, AN ARC DISTANCE OF 40.23 FEET;

N 10°31'52" W, A DISTANCE OF 115.05 FEET;

NORTHWESTERLY, ALONG A CURVE TO THE RIGHT HAVING A RADIUS OF 170.00 FEET, A DELTA ANGLE OF 113°55'34", A LONG CHORD THAT BEARS N 64°54'50" W A DISTANCE OF 285.03 FEET, AN ARC DISTANCE OF 338.03 FEET;

N 07°57'04" W, A DISTANCE OF 308.54 FEET;

NORTHEASTERLY, ALONG A CURVE TO THE RIGHT HAVING A RADIUS OF 200.00 FEET, A DELTA ANGLE OF 26°40'28", A LONG CHORD THAT BEARS N 05°23'10" E A DISTANCE OF 92.27 FEET, AN ARC DISTANCE OF 93.11 FEET;

N 18°43'24" E, A DISTANCE OF 794.92 FEET;

NORTHEASTERLY, ALONG A CURVE TO THE RIGHT HAVING A RADIUS OF 110.00 FEET, A DELTA ANGLE OF 33°45'48", A LONG CHORD THAT BEARS N 35°36'18" E A DISTANCE OF 63.89 FEET, AN ARC DISTANCE OF 64.82 FEET;

NORTHEASTERLY ALONG A CURVE TO THE RIGHT HAVING A RADIUS OF 165.00 FEET, A DELTA ANGLE OF 77°16'59", A LONG CHORD THAT BEARS N 00°41'08" E A DISTANCE OF 206.07 FEET, AN ARC DISTANCE OF 222.56 FEET;

N 39°19'38" E, A DISTANCE OF 257.36 FEET;

N 40°59'56" E, A DISTANCE OF 702.39 FEET;

NORTHEASTERLY, ALONG A CURVE TO THE RIGHT HAVING A RADIUS OF 190.00 FEET, A DELTA ANGLE OF 12°33'22", A LONG CHORD THAT BEARS N 47°16'37" E A DISTANCE OF

41.55 FEET, AN ARC DISTANCE OF 41.64 FEET;

N 53°33'19" E, A DISTANCE OF 795.99 FEET;

N 50°57'10" W, A DISTANCE OF 234.29 FEET;

N 59°51'12" W, A DISTANCE OF 153.33 FEET;

S 68°26'14" W, A DISTANCE OF 131.96 FEET;

S 50°24'24" W, A DISTANCE OF 563.67 FEET;

S 46°55'54" W, A DISTANCE OF 788.85 FEET;

SOUTHWESTERLY, ALONG A CURVE TO THE RIGHT HAVING A RADIUS OF 110.00 FEET, A DELTA ANGLE OF 84°57'02", A LONG CHORD THAT BEARS S 89°24'25" W A DISTANCE OF 148.56 FEET, AN ARC DISTANCE OF 163.09 FEET;

S 38°36'32" W, A DISTANCE OF 140.25 FEET;

NORTHWESTERLY, ALONG A CURVE TO THE RIGHT HAVING A RADIUS OF 200.00 FEET, A DELTA ANGLE OF 14°24'50", A LONG CHORD THAT BEARS N 46°30'53" W A DISTANCE OF 50.18 FEET, AN ARC DISTANCE OF 50.31 FEET TO THE POINT OF BEGINNING, AND CONTAINING 56.443 ACRES OF LAND, MORE OR LESS.

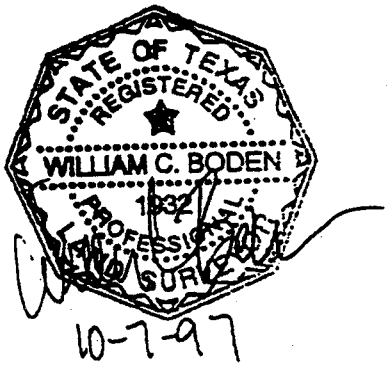

SURVEYED MAY - JUNE 1997.

BEARINGS ARE BASED ON GEODETIC NORTH.

A BOUNDARY EXHIBIT OF EVEN SURVEY DATE ACCOMPANIES THIS LEGAL DESCRIPTION.

Waterview Golf Club
Rowlett, Texas

Waterview Golf Course

Exhibit B - Personal Property Schedule

Golf Shop
Wall display fixtures as specified in construction documents and Design Modifications Document dated 2/20/99
Freestanding display fixtures as specified in construction documents and Design Modifications Document dated 2/20/99
Counter as specified in construction documents and Design Modifications Document dated 2/20/99
Bulletin board
Television (27" or 32")
VCR
Satellite or cable system
Public address system to staging/practice green/driving range w/wireless microphone
2 POS/data outlets, 1 at front counter, 1 at back counter
Phone outlets for 2 counter phones
Phone outlet for handicap computer

Manager's Office
One executive desk (lockable), chair and 2 guest chairs
Bookcase
Two four-drawer file cabinets (lockable)
Credenza
Telephone outlet
POS/data outlet
4 gang electrical outlet (behind credenza)
Rough-in 4S box to attic for CCTV (locate behind credenza)

Administrative/Pro's Office
2 telephone outlets
Fax outlet
Built-in work counters
Built-in upper storage cabinets
2 office chairs
2 four-drawer file cabinets (lockable)

Grille/Bar/Kitchen
Television (27" or 32"), wall or ceiling mount
Furniture, fittings and equipment per construction contract documents and Design Modifications Document dated 2/20/99
Phone outlets to bar and wait station (2)
Artwork and accessories
Chef's office with built-in storage, desk, chair and phone
Patio/outdoor seating/furniture
POS/data outlets to bar and wait station (2)

Waterview Golf Club
Rowlett, Texas

Clubhouse Maintenance Storage Room
Floor to ceiling shelving
Mop sink
Vinyl flooring

Cart Storage
Phone outlet at work bench
Phone outlet for Kronos time clock
Mechanic's work bench
Lockable storage cabinet
Electrical outlets (2) at work bench
Rough-in paging horn link to phone system
Telephone backboard (4' x 8' x 3/4" plywood)
Dedicated electrical outlet to phone backboard
Cart wash with silt separator
Hose bib to cart wash
Ice machine
Range ball washer
Commercial air compressor

Course and Practice Area Amenities
Putting green cups - course and practice greens
Tee monuments
Distance markers
Score board
Hazard and boundary stakes
Bag racks (in-ground mounted at bag drop and pro shop)
Putting green flags and flag sticks - course and practice greens
Tee markers
Ball washers
Benches
Spike brushes / shoe brushes
Bunker rakes - course and practice bunker(s)
Ash and trash receptacles

Driving Range
Target flags
Range ball dispenser (with electrical power)
Ball baskets
Portable bag racks
Distance markers, minimum 100, 150, 200, 200 yard markers
Club washing buckets with scrub brushes
Benches

Waterview Golf Club
Rowlett, Texas

Exterior Miscellaneous
Information signage
Entry monument
Directional signage
Pay phone

Maintenance Facility
Wash pad with silt separator
Hose bib at wash pad
2000 gallon above ground gasoline tank
1000 gallon above ground diesel tank
Emergency eyewash/shower
Exterior yard lighting
Chemical storage room
Mechanic' s bench
Hydraulic press
Floor jack
Engine stand
12 ton jack stand
3 ton jack stand
Battery charger
Battery tester
Oxygen/acetylene torch set
Arc welder
Hand truck
Bench grinder
Bench vise
Hose reel
Heavy duty compressor
Flammable storage container
Assorted steel shelving for store rooms
Equipment lift
Parts washer
Lapping machine
Mechanic's tools
Bed knife grinder
Reel grinder
Interior finish-out of all store rooms w/ 3/4" plywood

Waterview Golf Course
Rowlett, Texas
Smallwares/Startup Package

ITEM #	ITEM DESCRIPTION	MFG	MFG #	Min. Order	QTY	Unit Price	Unit	EXTENDED Price
	BAR SUPPLIES							
1	Bar Mat (Spill Stop) Brown	Traex	2330		6	$6.73	ea	$40.38
2	Bar Mixer	Hamilton Beach	936		0	$230.59	ea	$0.00
3	Bar Organizer	Cal Mil	683		1	$9.80	ea	$9.80
4	Bar Spoon (11")	American Metalcraft	511-K		3	$1.30	ea	$3.90
5	Blender (Inc's Cup)	Hamilton Beach	908NEWST		1	$78.95	ea	$78.95
6	Blender Cup	Hamiton Beach	6126-908		1	$27.53	ea	$27.53
7	Brush, Glass	Carlisle	40467		1	$8.48	ea	$8.48
8	Can Opener	ABC	TAP-1		2	$0.39	ea	$0.78
9	Cash Caddy - White Round	Cash Caddy Corp	UN3-white		4	$9.72	ea	$38.88
10	Cond. Dispenser (8/1 Pint) Brown	Carlisle	Silite CHO2		2	$24.73	ea	$49.46
11	Cutting Board/Knife Set	C.R. Mfg	1207-5300		1	$12.07	ea	$12.07
12	Glass Washer (3 brush)	Carlisle	4046103		1	$18.03	ea	$18.03
13	Glass Rimmer - Black	C.R. Mfg	100		2	$11.43	ea	$22.86
14	Neotex SPECIFY COLOR	Research Products	Prod 3070	1 ft	10	$1.88	ft	$18.80
	OR							
15	Tekliner, 2' x 1' sections, SPECIFY COLOR	Carlisle	3210		0	$2.35	ft	$0.00
16	Ice Scoops (Small Metal)	Vollrath	46790		2	$3.00	ea	$6.00
17	Overflow Pipe (7")	C.R. Mfg	100		2	$2.55	ea	$5.10
18	S/S Jigger 3/4 X 1 1/4	American Metalcraft	J-202-A		4	$1.82	ea	$7.28
19	Shaker 26 oz.	ABC	CS-26		2	$4.50	ea	$9.00
20	Shot Glass (2 oz - 1 1/4 oz line)	Libbey	48-A14	1 dz	2	$9.06	dz	$18.12
21	Store 'N Pour (set - 12 assorted)	Tablecraft	1032A	1 set	1	$42.34	set	$42.34
22	Store 'N Pour (individual)	Tablecraft	Specify color		4	$3.52	ea	$14.08
23	Strainer	Spill Stop	STOP 1010		2	$1.96	ea	$3.92
24	Tip Trays Brown Plastic	Carlisle	750		5	$2.15	ea	$10.75
25	Waiters Corkscrew	Franmara	2020		5	$2.90	ea	$14.50
26	Wine opener - table mounted	Franmara	4020-Brass		0	$236.41	ea	$0.00
	Subtotal Bar	**$461.01**						

Waterview Golf Course
Rowlett, Texas
Smallwares/Startup Package

ITEM #	ITEM DESCRIPTION	MFG	MFG #	Min.	QTY	Unit Price	Unit	EXTENDED
	GLASSWARE-Bar							
27	Beer (11 oz) Pilsner	Libbey	18	3 dz	0	$13.21	dz	$0.00
28	Beer, Golf Ball Pilsner	Libbey	3633	1 dz	3	$29.97	dz	$89.91
29	Beer, Mug (12 oz)	Libbey	5010	2 dz	0	$22.47	dz	$0.00
30	Brandy (2oz) Cordial	Libbey	3792	3 dz	0	$19.98	dz	$0.00
31	Brandy (5.5 oz) Snifter	Libbey	3702	3 dz	0	$13.37	dz	$0.00
32	Brandy (12 oz) Snifter	Libbey	3705	2 dz	0	$18.18	dz	$0.00
33	Collins (11 oz)	Libbey	2310	6 dz	0	$10.62	dz	$0.00
34	High Ball (9 oz)	Libbey	2325	6 dz	0	$9.99	dz	$0.00
35	Iced Tea (16 oz) Cooler/mixer	Libbey	1639	2 dz	0	$14.34	dz	$0.00
36	Irish Coffee	Libbey	5295	2 dz	0	$30.30	dz	$0.00
37	Martini 5 oz	Libbey	8455	3 dz	0	$19.98	dz	$0.00
38	Pitcher - beer 60 oz	Libbey	5260	1/2 dz	0	$46.88	dz	$0.00
39	Rocks (5 oz.)	Libbey	124	6 dz	0	$7.26	dz	$0.00
40	Rocks (9 oz.)	Libbey	128	6 dz	0	$8.86	dz	$0.00
41	Rocks (13 oz.)	Libbey	139	3 dz	0	$11.28	dz	$0.00
	OR							
42	Beer (11 oz) Pilsner	Anchor Hocking	3411U	3 dz	6	$9.45	dz	$56.70
43	Beer, Mug (12 oz)	Anchor Hocking	115-U	2 dz	0	$24.73	dz	$0.00
44	Brandy (6 oz) Snifter	Anchor Hocking	3950U	3 dz	3	$12.83	dz	$38.49
45	Brandy (12 oz) Snifter	Anchor Hocking	3951U	2 dz	2	$17.13	dz	$34.26
46	Collins (11 oz)	Anchor Hocking	3171U	6 dz	6	$7.24	dz	$43.44
47	High Ball (9 oz)	Anchor Hocking	3169U	6 dz	6	$6.40	dz	$38.40
48	Iced Tea (16 oz) Cooler/mixer	Anchor Hocking	7176FU	2 dz	6	$11.66	dz	$69.96
49	Irish Coffee	Anchor Hocking	308U	2 dz	2	$26.17	dz	$52.34
50	Martini 5.7 oz	Anchor Hocking	80020	4 dz	4	$18.52	dz	$74.08
51	Pitcher - beer 55 oz	Anchor Hocking	1155U	1/2 dz	3	$40.37	dz	$121.11
52	Rocks (5.5 oz.)	Anchor Hocking	3176U	6 dz	6	$6.54	dz	$39.24
53	Rocks (9 oz.)	Anchor Hocking	3178FU	6 dz	6	$7.14	dz	$42.84
54	Rocks (13 oz.)	Anchor Hocking	3113U	3 dz	3	$9.74	dz	$29.22
	Subtotal Bar Glassware	**$729.99**						
	GLASSWARE-Dining Room							
	Standard Club							
	Pattern: Excalibur							
55	Wine 8 oz.	Cardinal	15653	2 dz	0	$20.90	dz	$0.00
56	Champagne flute, 5 3/4 oz	Cardinal	15651	2 dz	0	$20.90	dz	$0.00
57	Water Goblet, 11 oz.	Cardinal	15354	2 dz	0	$20.90	dz	$0.00
	OR							
	Pattern: Florentine							
58	Wine 8 oz.	Anchor Hocking	80018	2 dz	0	$21.09	dz	$0.00
59	Champagne flute, 6 oz.	Anchor Hocking	80019	3 dz	0	$21.09	dz	$0.00
60	Water Goblet, 11 oz.	Anchor Hocking	80023	3 dz	0	$21.09	dz	$0.00
	OR							
	Pattern: Citation							
61	Wine 8 oz.	Libbey	8464	3 dz	0	$19.98	dz	$0.00
62	Champagne flute, 6 1/4 oz.	Libbey	8495	3 dz	0	$19.98	dz	$0.00
63	Water Goblet, 11 oz.	Libbey	8411	3 dz	0	$19.98	dz	$0.00
	OR							
	Pattern: Domaine							
64	Wine, 8 1/2 oz	Libbey	8941	1 dz	8	$20.30	dz	$162.40
65	Wine, 11 oz.	Libbey	8911	1 dz	0	$20.30	dz	$0.00
66	Champagne Flute, 6 oz.	Libbey	8995	1 dz	6	$20.30	dz	$121.80
67	Goblet, 13 oz.	Libbey	8956	1 dz	6	$20.30	dz	$121.80
	Subtotal Dining glassware	**$406.00**						

Waterview Golf Course
Rowlett, Texas
Smallwares/Startup Package

ITEM #	ITEM DESCRIPTION	MFG	MFG #	Min.	QTY	Unit Price	Unit	EXTENDED
	FLATWARE							
	Standard Club							
	Pattern: Scroll							
68	Cocktail Fork	Oneida	2201FOYF	3 dz	3	$21.42	dz	$64.26
69	Dinner Fork	Oneida	2201FDNF	3 dz	24	$25.90	dz	$621.60
70	Dinner Knife	Oneida	2201KPVE	3 dz	16	$45.61	dz	$729.76
71	Bouillon Spoon	Oneida	2201SBLF	3 dz	3	$23.95	dz	$71.85
72	Iced Tea Spoon	Oneida	2201SITF	3 dz	3	$22.34	dz	$67.02
73	Soup/Dessert Spoon	Oneida	2201SDET	3 dz	3	$23.95	dz	$71.85
74	Teaspoon	Oneida	2201STSF	3 dz	24	$14.06	dz	$337.44
75	Knife, Wood Handle Steak	ABC	5K2202105	1 dz	16	$5.35	dz	$85.60
76	Knife, Pistol Grip Steak	World Crisa	195276/2	1 dz	0	$30.82	dz	$0.00
	Pattern: Marseilles							
77	Cocktail Fork	ABC	Mar-07	1 dz	0	$9.95	dz	$0.00
78	Dinner Fork European	ABC	Mar-16	1 dz	0	$21.90	dz	$0.00
79	Dinner Fork American	ABC	Mar-05	1 dz	0	$15.11	dz	$0.00
80	Dinner Knife	ABC	Mar-09	1 dz	0	$19.50	dz	$0.00
81	Bouillon Spoon	ABC	Mar-02	1 dz	0	$15.75	dz	$0.00
82	Iced Tea Spoon	ABC	Mar-04	1 dz	0	$10.95	dz	$0.00
83	Soup/Dessert Spoon	ABC	Mar-03	1 dz	0	$15.75	dz	$0.00
84	Teaspoon	ABC	Mar-01	1 dz	0	$9.95	dz	$0.00
	FLATWARE							
	Premium Club							
	Pattern: Baguette							
85	Cocktail Fork, Baguette	World Crisa	213-029	3 dz.	0	$20.14	dz	$0.00
86	European Fork Baguette	World Crisa	213-39	3 dz	0	$35.66	dz	$0.00
87	Regular Dinner Fork, Baguette	World Crisa	213-030	3 dz.	0	$28.96	dz	$0.00
88	Bread & Butter Knife, Baguette	World Crisa	213-554	3 dz.	0	$27.74	dz	$0.00
89	1 piece Knife Baguette	World Crisa	213-750/2	3 dz	0	$48.74	dz	$0.00
90	Bouillon Spoon, Baguette	World Crisa	213-016	3 dz.	0	$29.89	dz	$0.00
91	Iced Tea Spoon, Baguette	World Crisa	213-021	3 dz.	0	$35.70	dz	$0.00
92	Soup/Dessert Spoon Baguette	World Crisa	213-002	3 dz	0	$30.80	dz	$0.00
93	Teaspoon Baguette	World Crisa	213-001	3 dz	0	$19.28	dz	$0.00
	Premium Club							
	Pattern: Luxor							
94	Cocktail Fork, Luxor	Walco	9315	2 dz	0	$17.84	dz	$0.00
95	European Fork, Luxor	Walco	93051	2 dz	0	$28.00	dz	$0.00
96	Dinner Fork, Luxor	Walco	9305	2 dz	0	$24.64	dz	$0.00
97	Salad Fork, Luxor	Walco	9306	2 dz	0	$19.68	dz	$0.00
98	Butter Spreader, Luxor	Walco	9311	2 dz	0	$17.52	dz	$0.00
99	1 Piece Knife, Luxor	Walco	9345	1 dz	0	$27.62	dz	$0.00
100	European Knife, Luxor	Walco	93451	1 dz	0	$34.21	dz	$0.00
101	Bouillon Spoon, Luxor	Walco	9312	2 dz	0	$20.52	dz	$0.00
102	Demitasse Spoon, Luxor	Walco	9329	2 dz	0	$12.64	dz	$0.00
103	Dessert Spoon, Luxor	Walco	9307	2 dz	0	$23.94	dz	$0.00
104	Iced Tea Spoon, Luxor	Walco	9304	2 dz	0	$16.58	dz	$0.00
105	Serving Spoon, Luxor	Walco	9303	1 dz	0	$38.64	dz	$0.00
106	Teaspoon, Luxor	Walco	9301	3 dz	0	$14.32	dz	$0.00
	Subtotal Flatware	**$2,049.38**						

Waterview Golf Course
Rowlett, Texas
Smallwares/Startup Package

ITEM #	ITEM DESCRIPTION	MFG	MFG #	Min.	QTY	Unit Price	Unit	EXTENDED
	CHINA							
	Standard Club							
	Pattern: Cascade							
107	Bouillon Cup (7 1/4 oz)	Syracuse	950038059	3 dz	3	$34.82	dz	$104.46
108	Coffee Cup (8 1/2 oz stacking)	Syracuse	950093107	3 dz	15	$45.70	dz	$685.50
109	Coffee Mug (10 1/4 oz)	Syracuse	950092218	3 dz	3	$50.60	dz	$151.80
110	Fruit-Monkey Dish (4 oz)	Syracuse	950038155	3 dz	6	$28.82	dz	$172.92
111	Grapefruit (10 oz)	Syracuse	950038007	3 dz	3	$43.60	dz	$130.80
112	Plate 10 3/4" Dinner	Syracuse	950038333	1 dz	15	$83.69	dz	$1,255.35
113	Plate 9" Salad	Syracuse	950038310	2 dz	12	$54.14	dz	$649.68
114	Plate 6 3/8" B & B	Syracuse	950038261	3 dz	15	$35.16	dz	$527.40
115	Plate 7 3/8" Dessert	Syracuse	950038285	3 dz	15	$39.38	dz	$590.70
116	Rimmed Soup Bowl (14 oz)	Syracuse	950038387	1 dz	3	$63.99	dz	$191.97
117	Saucer	Syracuse	950038431	3 dz	15	$31.64	dz	$474.60
	Premium Club							
	Pattern: Easy	PLEASE NOTE: OPENING ORDERS ON VILLEROY WILL BE FOB N.J.						
118	Bouillon Cup	Villeroy	1710	1 dz	0	$47.37	dz	$0.00
119	Coffee Cup, Stacking	Villeroy	1271	1 dz	0	$53.11	dz	$0.00
120	Coffee Mug	Villeroy	4879	1 dz	0	$65.07	dz	$0.00
121	Fruit-Monkey Dish (4 oz)	Villeroy	3930	1 dz	0	$50.24	dz	$0.00
122	Grapefruit/cereal	Villeroy	3800	1 dz	0	$53.11	dz	$0.00
123	Plate 10 1/2" Dinner	Villeroy	2620	1 dz	0	$88.52	dz	$0.00
124	Plate 11 1/4" Dinner	Villeroy	2600	1 dz	0	$124.41	dz	$0.00
125	Plate 9 1/2"	Villeroy	2630	1 dz	0	$77.03	dz	$0.00
126	Plate 6 1/4" B & B	Villeroy	2660	1 dz	0	$44.50	dz	$0.00
127	Plate 8 1/4" Dessert	Villeroy	2640	1 dz	0	$55.98	dz	$0.00
128	Rimmed Soup Bowl 9"	Villeroy	2700	1 dz	0	$77.03	dz	$0.00
129	Saucer	Villeroy	1280	1 dz	0	$38.28	dz	$0.00
	OR							
	Premium Club							
	Pattern: Adriana	PLEASE NOTE: OPENING ORDERS ON VILLEROY WILL BE FOB N.J.						
130	Bouillon Cup	Villeroy	4724	1 dz	0	$66.65	dz	$0.00
131	Coffee Cup - stacking	Villeroy	4924	1 dz	0	$75.11	dz	$0.00
132	Coffee Mug	Villeroy	3501	1 dz	0	$83.25	dz	$0.00
133	Fruit-Monkey Dish (4 oz)	Villeroy	8831	1 dz	0	$71.29	dz	$0.00
134	Grapefruit/cereal	Villeroy	8811	1 dz	0	$83.25	dz	$0.00
135	Plate 10 1/2" Dinner	Villeroy	4271	1 dz	0	$122.01	dz	$0.00
136	Plate 11 1/4" Dinner	Villeroy	4291	1 dz	0	$154.02	dz	$0.00
137	Plate 9 1/2"	Villeroy	2630	1 dz	0	$101.92	dz	$0.00
138	Plate 6 1/4" B & B	Villeroy	4161	1 dz	0	$58.37	dz	$0.00
139	Plate 8 1/4" Dessert	Villeroy	4211	1 dz	0	$77.03	dz	$0.00
140	Rimmed Soup Bowl 9"	Villeroy	2231	1 dz	0	$101.92	dz	$0.00
141	Saucer	Villeroy	6525	1 dz	0	$53.07	dz	$0.00
	Subtotal China	$4,936.18						

Waterview Golf Course
Rowlett, Texas
Smallwares/Startup Package

ITEM #:	ITEM DESCRIPTION	MFG	MFG #	Min.	QTY	Unit Price	Unit	EXTENDED
	DINING ROOM/FRONT OF HOUSE							
142	Ashtrays - safety OR	Libbey	5164	3 dz	3	$11.91	dz	$35.73
143	Ashtray	Villeroy	4060		0	$53.11	dz	$0.00
144	Baskets - sandwich snack bar, plastic	Tablecraft	1076	3 dz	0	$9.79	dz	$0.00
	specify color							
145	OR Baskets - washable wicker	Tablecraft	1176W	3 dz	6	$19.68	dz	$118.08
146	Booster Chair (Beige)	Cambro	100BC#157		2	$12.52	ea	$25.04
147	Bread Baskets -Standard Club	Willow Specialties	8-102519	1 dz	36	$1.67	ea	$60.12
148	Bread Baskets - Premium Club - wire, oval	ABC	BGM-05		0	$5.95	ea	$0.00
	OR							
149	Bread Basket - Premium club - weave	ABC	BGM-08		0	$11.70	ea	$0.00
150	Buffet Tray (15" x 10") S/S-Std Club	Vollrath	47236		6	$12.68	ea	$76.08
151	Buffet Tray (21" x 13") S/S-Std Club	Vollrath	47242		6	$20.24	ea	$121.44
152	Buffet Tray (16" x 11 5/8") S/S-Premium Club	Vollrath	82110		0	$30.89	ea	$0.00
153	Buffet Tray (21 3/4" x 16") S/S-Premium Club	Vollrath	82111		0	$48.33	ea	$0.00
154	Bus Cart 16 X 30 2 Shelf Beige	Rubbermaid	4505		1	$97.33	ea	$97.33
155	Cake cutting set - Knife, 9" Slicing	Vollrath	48145		1	$9.75	ea	$9.75
156	Cake cutting set - Pastry Server	ABC Procurement	087		1	$5.92	ea	$5.92
157	Candle holder - Votive standard club	Libbey	763	3 dz	0	$6.62	dz	$0.00
	OR							
158	Candle holder - Votive premium club	Libbey	19685	4 dz	0	$9.18	dz	$0.00
	CHAFING DISHES							
	Buffet Banquet/Tournament Club							
159	Frame	ABC Procurement	CWF-01		0	$11.68	ea	$0.00
160	Water Pan 6" deep	ABC Procurement	ST2006		0	$25.86	ea	$0.00
161	Cover	ABC Procurement	STDC-2000		0	$25.87	ea	$0.00
162	Standard Club - Rec. Dome Top	ABC Procurement	CDD1 (46480)		8	$174.22	ea	$1,393.76
	(Hinged lid/brass trim)							
163	Round Chafer	ABC Procurement	CDD-2		4	$150.00	ea	$600.00
164	Chafing Dish Case, Red	Vollrath	52645		12	$34.90	ea	$418.80
165	Premium Club (includes case)	Stokli/World Crissa	7521-21		0	$508.39	ea	$0.00
	OR							
166	Premium Club -Roll Top - contemp	Bon Chef	12004		0	$857.45	ea	$0.00
167	Premium Club -Roll Top - trad.	Bon Chef	12040		0	$857.45	ea	$0.00
168	Premium Club - rd 2 gal contemp	Bon Chef	12010		0	$676.50	ea	$0.00
169	Premium Club - rd 2 gal trad.	Bon Chef	12009		0	$676.50	ea	$0.00
170	Premium Club - rd 1 gallon - trad	Bon Chef	12014		0	$536.25	ea	$0.00
171	Chafing Dish Case, Gray	Vollrath	52647		0	$132.99	ea	$0.00
172	Chafing Dish - Marmite	Vollrath	46075		2	$159.91	ea	$319.82
173	Cheese Shaker(12oz)S.S.top	Vollrath	46163		2	$2.24	ea	$4.48

Waterview Golf Course
Rowlett, Texas
Smallwares/Startup Package

ITEM #	ITEM DESCRIPTION	MFG	MFG #	Min.	QTY	Unit Price	Unit	EXTENDED
	COFFEE SERVERS							
	Buffet Banquet/Tournament Club							
174	Coffee Server 42 oz Insulated - regular	Update	H302214B		8	$8.98	ea	$71.84
175	Coffee Server 42 oz Insulated - decaf	Update	H302214D		8	$8.98	ea	$71.84
	OR							
176	Coffee Server 40 oz Insulated - regular	ABC	INS-01		0	$8.62	ea	$0.00
177	Coffee Server 40 oz Insulated - decaf	ABC	INS-01-D		0	$8.62	ea	$0.00
	Standard Club							
178	Coffee Server 1 liter insulated Silver	Update	UD1000N		0	$21.60	ea	$0.00
179	Replacement glass liner	Update	UD1000RP		0	$8.65	ea	$0.00
180	Coffee Server 1.9 liter insulated Silver	Update	AS-190		0	$25.28	ea	$0.00
181	Replacement glass liner	Update	LN1.9		0	$16.63	ea	$0.00
	Premium Club							
182	Coffee Server S/S Insulated 32 oz	Bon Chef	4052		0	$73.20	ea	$0.00
	OR							
183	Coffee Server 60 oz S/S	ABC	Venus		0	$43.50	ea	$0.00
	COFFEE URNS							
	Buffet Banquet/Tournament Club							
184	Coffee Urn Insulated 5 gallon specify color	Cambro	500UC		1	$103.46	ea	$103.46
185	Coffee Urn Insulated 2.5 gallon specify color	Cambro	250UC		2	$92.57	ea	$185.14
	Standard Club							
186	Coffee Urn 90 cup Brewer warmer	Farberware	L900C		1	$251.34	ea	$251.34
187	Coffee Urn 65 cup Brewer warmer	Farberware	L650C		1	$225.06	ea	$225.06
	OR							
188	Coffee Urn S/S (3 gal)	Vollrath - NY NY	46093		0	$386.32	ea	$0.00
189	Coffee Urn S/S (5 gal)	Vollrath - NY NY	46094		0	$503.11	ea	$0.00
	Premium Club							
190	Coffee Urn Insulated SS 5 gallon	Bon Chef	40005		0	$1,237.50	ea	$0.00
191	Coffee Urn Insulated SS 3 gallon	Bon Chef	40003		0	$1,153.55	ea	$0.00
192	Cracker Basket	ABC	RBP-3	1 dz	24	$1.51	ea	$36.24
193	Creamer S/S (5 oz) with lid OR	Admiral	CIR-588	1 dz	12	$2.38	ea	$28.56
194	Creamer - 3 1/2 oz	Villeroy/Corpo	800	1dz	0	$87.52	dz	$0.00
195	Crock, White Ceramic, 1 qt.	Hall	301	1 dz	12	$128.74	dz	$1,544.88
196	Gooseneck - Standard Club 8 oz SS	Vollrath	47578	1 dz	0	$5.27	ea	$0.00
197	Gooseneck 9 oz S/S w/Base - Premium Club	Oneida	3050-1151A		0	$19.66	ea	$0.00
198	Heat lamp with bulb - Standard Club	Carlisle	HL7237		1	$126.44	ea	$126.44
199	Open number							
200	Heat lamp Cutting Board	Teknor Apex	171876		1	$9.76	ea	$9.76
201	Heat lamp/Carving Display - Premium Club	REWDCO	CD/LUX		0	$1,889.78	ea	$0.00
	(4 lamps)							
202	Heat Lamp Carving Set	F. Dick	D33-8493000		1	$40.37	set	$40.37

Waterview Golf Course
Rowlett, Texas
Smallwares/Startup Package

ITEM #	ITEM DESCRIPTION	MFG	MFG #	Min.	QTY	Unit Price	Unit	EXTENDED
203	High Chair (oak)	ABC	HC1KD		1	$45.70	ea	$45.70
204	Hot Dog Box with 1 heat pak (for	Cambro	41PMC		1	$135.10	ea	$135.10
	convenience carts) Specify color							
205	Hot Dog Box heat pak (spare)	Cambro	212HP		1	$21.40	ea	$21.40
206	Ice Caddy - Banquet (#125 Brown)	Cambro	1C125L		1	$359.52	ea	$359.52
207	Ladle 2 oz. w/ spout	Oneida	T012MGLF		4	$5.08	ea	$20.32
208	Ladle 6 oz. S/S	Oneida	9583A		4	$8.78	ea	$35.12
209	Oil & Vinegar Cruets set	Tomlinson	13-108-15		4	$16.15	set	$64.60
210	O/V Cruets rack	Tomlinson	13-240-10		0	$9.33	ea	$0.00
211	O/V Cruets	Anchor Hocking	171F		0	$1.42	ea	$0.00
212	Oyster Cocktail (2 1/2 Oz) clear	Anchor Hocking	14U	1 dz	1	$5.66	dz	$5.66
213	Pastry Server - Banq., Luvre	World Crisa	492.022		0	$6.12	ea	$0.00
214	Peppermill 10" Walnut	Olde Thompson	10-5500-0-0		0	$12.95	ea	$0.00
	OR							
215	Peppermill 15" Clear	Olde Thompson	3060-35-00		0	$21.10	ea	$0.00
	Buffet Banquet/Tournament Club							
216	Pitcher - Water 60 oz Plastic	Carlisle	N5540	1/2 dz	24	$3.82	ea	$91.68
	OR							
217	Pitcher-Water 60 oz. Plastic	Cambro	P600CW		0	$4.41	ea	$0.00
	Standard Club							
218	Pitcher - Water 60oz S/S w no ice guard	ABC	Venus		0	$30.00	ea	$0.00
	Premium Club							
219	Pitcher - Water 2 1/8 qt S/S (no ice guard)	Vollrath	82020		0	$52.33	ea	$0.00
	OR							
220	Pitcher - Water 64 oz S/S w ice guard	Oneida	3050-0380A		0	$80.56	ea	$0.00
221	Portable Induction Heat cooktop - ind. OR	Glowmaster	GMI2000		2	$235.22	ea	$470.44
222	Portable Induction Heat cooktop - ind.	Iwatani	US-5000-15M		0	$357.53	ea	$0.00
223	Portable Butane Stoves	Iwatani	A-8		2	$52.27	ea	$104.54
224	Punch Bowl 11 qt cupped bowl	Anchor Hocking	4570 EU		1	$37.23	ea	$37.23
225	Ramekin (5 oz) med	Cuthbertson	88001	4 dz	0	$38.82	dz	$0.00
226	Salad Bowl, 14x20" Black plastic	Cambro	RSB14191CW		6	$13.36	ea	$80.16
227	Salad Bowl, 23" RD Black plastic	Cambro	RSB231CW		6	$32.88	ea	$197.28
228	Salad Bowl 9" Arcade clear	Cardinal	8000515	1 dz	0	$37.96	dz	$0.00
229	Salad Bowl 8" Arcade clear	Cardinal	8000523	2 dz	0	$28.26	dz	$0.00
230	Salad Bowl 7" Arcade clear	Cardinal	8000531	2 dz	0	$24.34	dz	$0.00
	OR							
231	Salad Bowl 12" Fleur	Cardinal	8006093	1/2 dz	0.50	$134.04	dz	$67.02
232	Salad Bowl 10 1/2" Fleur	Cardinal	8006626	1/2 dz	0.5	$63.12	dz	$31.56
233	Salad Bowl 9" Fleur	Cardinal	8008112	1 dz	1	$53.16	dz	$53.16
234	Salad Bowl 7" Fleur	Cardinal	8007432	1 dz	1	$31.20	dz	$31.20
235	Salt & Pepper Square - mushroom top	Traex	202-72	2 dz	4	$16.84	dz	$67.36
236	Salt & Pepper w/ Chrome Top	Tablecraft	B835S&P		0	$6.20	dz	$0.00
237	Service Tray(14" round)griplite tan	Cambro	1400CT#138		6	$7.90	ea	$47.40
238	Service Tray(27"oval)Griplite tan	Cambro	2700CT#138		6	$21.31	ea	$127.86
239	Serving Fork 9 1/4"	Crissa	492.019		0	$5.87	ea	$0.00
	OR							
240	Serving Fork - 2 Tine 11 3/16"	Vollrath	46955		0	$5.40	ea	$0.00
241	Serving Fork - 4 Tine 10 3/8"	Vollrath	46956		6	$5.40	ea	$32.40
242	Serving Spoon Solid - S/S 9 3/4"	Crissa	492.015		0	$6.12	ea	$0.00
	OR							

Waterview Golf Course
Rowlett, Texas
Smallwares/Startup Package

ITEM #	ITEM DESCRIPTION	MFG	MFG #	Min.	QTY	Unit Price	Unit	EXTENDED
243	Serving Spoon Solid - S/S 11 5/8"	Vollrath	46952		6	$5.40	ea	$32.40
244	Serving Spoon Slotted -S/S 9 3/4"	Crissa	492.017		0	$6.12	ea	$0.00
	OR							
245	Serving Spoon Slotted -S/S 12"	Vollrath	46960		6	$5.40	ea	$32.40
246	Serving Spoon Notched - S/S 11 5/8"	Vollrath	46950		6	$5.40	ea	$32.40
247	Serving Tongs Serving S/S Pastry	World Crisa	7725.000		4	$4.84	ea	$19.36
248	Serving Tongs Serving S/S 8" serving	World Crisa	7253		4	$7.65	ea	$30.60
249	Skirting, Table, Wild Rice Fabric	Marko	27A 112mp w/29"		185	$8.05	ft	$1,489.25
	Accordian Pleat, standard webbing with							
	112mp clips, 29" drop - specify color							
250	Skirting, Stage, Oxford, Shirred	Marko	22VS 118mp		0	$4.99	ft	$0.00
	velcro attached, specify color							
251	Skirting Hanger, metal	Marko	H12		10	$2.96	ea	$29.60
252	Storage Rack for Skirting	Marko	1380SR		1	$151.17	ea	$151.17
253	Sugar Packet Holder(4")glass	Libbey	5258	1 dz	2	$14.94	dz	$29.88
254	Syrup Dispenser(14 oz) SS top	Traex	214		0	$5.99	ea	$0.00
255	Table Number Set 1-50	American Metalcraft	4-50		0	$6.35	set	$0.00
256	Table Number Stands (12")	American Metalcraft	RS12		0	$6.46	ea	$0.00
257	Teapot, 10 oz. - gooseneck	Vollrath	46310		12	$7.99	ea	$95.88
258	Tray Jack, brown wooden	Excell	766		6	$22.71	ea	$136.26
259	Wine Bucket (8 qt) S/S	Vollrath	46801		0	$25.99	ea	$0.00
260	Wine Bucket Stand	Vollrath	46800		0	$19.83	ea	$0.00
	Subtotal Dining/Front of House	**$10,187.19**						

Waterview Golf Course
Rowlett, Texas
Smallwares/Startup Package

ITEM #:	ITEM DESCRIPTION	MFG	MFG #	Min.	QTY	Unit Price	Unit	EXTENDED
	KITCHEN/BACK OF HOUSE							
261	Adapter Bars (12 1/2 X 3/4 X 1/4") (Min 12)	Vollrath	75012		0	$3.29	ea	$0.00
262	Adapter Bars (20 1/2 X 3/4 X 1/4") (Min 12)	Vollrath	75020		0	$5.05	ea	$0.00
263	Adapter Plate (2-7 1/4 qt inserts)	Star	131		0	$29.50	ea	$0.00
264	Beer Keg Dolly	DeVault	ICD3000		2	$40.25	ea	$80.50
265	Beer Case Dolly	DeVault	ICD4000		2	$40.25	ea	$80.50
266	Beer Keg Spacer	DeVault	ICD1000		2	$28.75	ea	$57.50
267	Ber Mixer	Novon	MX91		0	$491.63	ea	$0.00
268	Bowl Brush	Carlisle	40141		2	$5.99	ea	$11.98
269	Box Grater S/S	Traex	SG-200		1	$9.08	ea	$9.08
270	Broom, Corn, long handle	A-1 Broom & Supply	BR6815		2	$4.50	ea	$9.00
	OR							
271	Broom, Corn, long handle	Rubbermaid	6383		0	$8.88	ea	$0.00
272	Broom, Corn, short handle, toy size	A-1 Broom & Supply	BR200TOYBR		0	$3.65	ea	$0.00
	OR							
273	Broom, Corn, short handle, toy size	Rubbermaid	6373		2	$3.05	ea	$6.10
274	Braising pan	Lincoln Wearever	4100		0	$119.76	ea	$0.00
275	Brush, Utility Wire	Carlisle	40671		2	$3.64	ea	$7.28
276	Bucket, Round White, 14 qt.	Continental Mfg	8114		1	$5.32	ea	$5.32
277	Bucket Opener (21")	Mepco	SLIM		1	$5.95	ea	$5.95
	OR							
278	Bucket Opener (21")	CR Mfg.	1140		0	$7.51	ea	$0.00
279	Bus Tub/dish box 15220 divide	Carlisle	386		5	$7.27	ea	$36.35
280	Bus Tub/dish box undivided	Cambro	21155CBL180		5	$3.29	ea	$16.45
281	Cake Pans (9"X2") layer	Lincoln Wearever	5347		0	$7.15	ea	$0.00
282	Can Opener (manual base) #1	Edlund	A501		1	$7.84	ea	$7.84
283	Can Opener (manual opener) #1	Edlund	0110		1	$55.90	ea	$55.90
284	Carpet Sweeper	Continental Mfg	5323		2	$36.21	ea	$72.42
285	Check Holder (round)	McIndustries	CM3		0	$39.93	ea	$0.00
285	Check Holder 4'				1	$100.00	ea	$100.00
286	Clock, Kitchen (wall)	Seth Thomas	5H495		1	$29.81	ea	$29.81
287	Colander 16 qt.	Wearever	4616		1	$62.67	ea	$62.67
288	Collander 11 qt	Lincoln Wearever	4611		1	$47.07	ea	$47.07
289	Cutting Boards (6 pc set 18X24"), color coded	Katchall	CB1824-KC		1	$115.38	ea	$115.38
290	Dish Dolly Poker Chip	Intermetro	PCD11A		2	$531.97	set	$1,063.94
291	Dish Rack Dolly, w/o handle	Amco	231AR		3	$67.03	ea	$201.09
292	Dish Rack Dolly w/Handle	Amco	230AR		1	$90.81	ea	$90.81
293	Dish Rack Dolly Repl. Handle	Amco	230HAN		0	$16.99	ea	$0.00
294	Dish Wash Rack (brandy), 16 compt	Amco Corp.	P-4923		4	$30.35	ea	$121.40
295	Dish Wash Rack (champagne), 36 compt	Amco Corp.	P-8266		2	$47.40	ea	$94.80
296	Dish Wash Rack (cup), 20 compt.	Amco Corp.	P-5022		2	$18.49	ea	$36.98
297	Dish Wash Rack (flat)	Amco Corp.	P-6200		2	$11.76	ea	$23.52
298	Dish Wash Rack (Ice Tea & collins)	Amco Corp.	P-8044		4	$28.31	ea	$113.24
	25 compt.							
299	Dish Wash Rack (pegs/multi purpose)	Amco Corp.	P-1700		2	$11.42	ea	$22.84
300	Dish Wash Rack (5 & 9 oz rocks), 25 compt.	Amco Corp.	P-8023		4	$22.00	ea	$88.00
301	Dish Wash Rack (water, wine & pilsner)	Amco Corp.	P-8055		4	$39.00	ea	$156.00
	25 compt.							
302	Disher (#16) 2 1/4"	Hamilton Beach	#78SZ16		1	$6.66	ea	$6.66
303	Disher (#30) 1 3/4"	Hamilton Beach	#78 SZ30		1	$6.66	ea	$6.66
304	Disher (#8) 2 3/4"	Hamilton Beach	#78 SZ8		1	$6.66	ea	$6.66
305	Double Boiler w/Cover (17 1/2 qt)	Vollrath	67717		1	$83.15	ea	$83.15
306	Dredge - 8/8 (2 3/4 X 3 3/4")	Lincoln Wearever	5062		2	$4.24	ea	$8.48
307	Dunnage Racks 60" X 21"	Cambro	DR600		2	$137.40	ea	$274.80
308	Dust Pan Heavy Duty plastic	Continental Mfg	712		2	$1.71	ea	$3.42

Waterview Golf Course
Rowlett, Texas
Smallwares/Startup Package

ITEM #	ITEM DESCRIPTION	MFG	MFG #	Min.	QTY	Unit Price	Unit	EXTENDED
309	Dust Pan (lobby)	Excell Metal	304		2	$16.09	ea	$32.18
310	Egg Poacher	Admiral Craft	AEP-8C		0	$26.13	ea	$0.00
311	Egg Slicer	American Metalcraft	ES-474		1	$4.23	ea	$4.23
312	Flatware Storage Box Brown	Cambro	1120		2	$5.29	ea	$10.58
313	Flatware Wash Basket (8 comp)	AMCO	215		4	$11.60	ea	$46.40
314	Floor Mats - anti fatigue	Teknor Apex	183244		8	$53.92	ea	$431.36
315	Floor Mats - grease proof	Teknor Apex	182766		0	$74.42	ea	$0.00
316	Floor Signs (English & Spanish)	Continental Mfg.	124		2	$12.60	ea	$25.20
317	Food Storage Box Lids	Cambro	1826CCW		12	$11.37	ea	$136.44
318	Food Storage Boxes (18X26X6)	Cambro	18266CW		4	$21.11	ea	$84.44
319	Food Storage Boxes (18X26X9)	Cambro	18269CW		4	$28.58	ea	$114.32
320	Food Storage Boxes (18x26x15)	Cambro	182615CW		4	$42.92	ea	$171.68
321	Fork 13 1/2"	Russel Harrington	14090 S2896-1/2		1	$11.30	ea	$11.30
322	Fork meat 21"	Russel Harrington	141712386F		1	$10.78	ea	$10.78
323	Fry Pan (8") Magnetic for induction cooktop	Iwatani	92220		2	$30.35	ea	$60.70
324	Fry Pan (10") Magnetic for induction cooktop	Iwatani	992226		2	$47.23	ea	$94.46
325	Fry Pan (12") Magnetic for induction cooktop	Iwatani	92232		2	$66.76	ea	$133.52
326	Fry Pan (8") Ceramiguard	Lincoln Wearever	Z4008		3	$17.94	ea	$53.82
327	Fry Pan (10") Ceramiguard	Lincoln Wearever	Z4010		3	$24.20	ea	$72.60
328	Fry Pan (12") Ceramiguard	Lincoln Wearever	Z4012		3	$34.00	ea	$102.00
329	Funnel - 16 oz	American Metalcraft	524		1	$3.40	ea	$3.40
330	Funnel - 8 oz.	Harold Leonard	368		1	$0.82	ea	$0.82
331	Garbage Can (15 qt)	Continental Mfg	2818		2	$2.48	ea	$4.96
332	Garbage Can (20 gal.)	Continental Mfg	2000		2	$10.52	ea	$21.04
333	Garbage Can (32 gal.)	Continental Mfg	3200		4	$14.82	ea	$59.28
334	Garbage Can Dolly	Continental Mfg	3244P		4	$22.36	ea	$89.44
335	Hand Truck 12" blade	SAMCO	932		1	$86.10	ea	$86.10
	OR							
336	Hand Truck 12" blade	Associated	188		0	$110.10	ea	$0.00
337	Ice Scoops (Alum) 48 oz	Lincoln Wearever	5283		1	$16.20	ea	$16.20
338	Ice Scoop 18 oz.	Lincoln Wearever	5280		1	$6.48	ea	$6.48
339	Ingredient Bins 27 gallon (Hinged lid)	Rubbermaid	3602		2	$169.67	ea	$339.34
340	Inset Cover (4 1/8 qt)	ABC	STC6 1/2		2	$3.72	ea	$7.44
341	Inset pan, vegetable 4 qt	ABC	ST1-6 1/2		2	$12.00	ea	$24.00
342	Inset Cover (7 1/4 qt)	ABC	STC-8 1/2		2	$5.16	ea	$10.32
343	Inset pan, vegetable 7 qt	ABC	ST1-8 1/2		2	$14.36	ea	$28.72
345	Inset Pan (full) perforated 4"	ABC	ST-2004PF		6	$24.68	ea	$148.08
346	Inset Pan (1/3" X 4")	ABC	ST-1304		6	$9.56	ea	$57.36
347	Inset Pan (1/3" X 6")	ABC	ST-1306		6	$9.38	ea	$56.28
348	Inset Pan (1/4" X 4")	ABC	ST-1404		6	$8.42	ea	$50.52
349	Inset Pan (1/6" X 4")	ABC	ST-1604		6	$5.78	ea	$34.68
350	Inset Pan (12" X 10" X 2 1/2") half	ABC	ST-1202		6	$6.06	ea	$36.36
351	Inset Pan(12 X 10 X 4") half	ABC	ST-1204		6	$10.32	ea	$61.92
352	Inset Pan (12 X 20 X 2 1/2") full	ABC	ST-2002		6	$12.26	ea	$73.56
353	Inset Pan (12 X 20 X 4") full	ABC	ST-2004		4	$15.12	ea	$60.48
354	Inset Pans false bottom (full)	ABC	ST-2004-FB		2	$8.34	ea	$16.68
355	Kitchen Shears (11")	F. Dick Co.	9008221		1	$24.17	ea	$24.17
356	Knife (10") Chef's	Russel Harrington	S145-10		2	$16.51	ea	$33.02
357	Knife (12") slicer - roast beef	Russel Harrington	S140SC-12		1	$14.93	ea	$14.93
358	Knife (3 1/4") paring	Russel Harrington	S104		2	$4.99	ea	$9.98
359	Knife (6")boning	Russel Harrington	S136F		0	$9.02	ea	$0.00
360	Knife (8")bread	Russel Harrington	S162-8SC		2	$9.63	ea	$19.26
361	Knife Cleaver 7" Blade	Russel Harrington	5387		1	$20.28	ea	$20.28
362	Knife Rack w/ skirt	Edlund Co.	KR99 (0399)		1	$35.28	ea	$35.28
363	Ladles S/S - 1 oz	Calder Inc.	5001 11 1/4"		2	$2.20	ea	$4.40
364	Ladles S/S - 2 oz	Calder Inc.	5002 11 1/4"		2	$2.64	ea	$5.28
365	Ladles S/S - 4 oz	Calder Inc.	5004 12 1/2"		2	$3.60	ea	$7.20
366	Ladles S/S - 8 oz	Calder Inc.	5008 12 1/2"		2	$5.52	ea	$11.04

Waterview Golf Course
Rowlett, Texas
Smallwares/Startup Package

ITEM #	ITEM DESCRIPTION	MFG	MFG #	Min.	QTY	Unit Price	Unit	EXTENDED
	OR							
367	Ladles S/S - 1 oz.	ABC	L1		0	$1.69	ea	$0.00
368	Ladles S/S - 2 oz	ABC	L2		0	$2.13	ea	$0.00
369	Ladles S/S - 4 oz	ABC	L4		0	$2.50	ea	$0.00
370	Ladles S/S - 8 oz	ABC	L8		0	$3.65	ea	$0.00
371	Loaf Pan (10X5X4)	Lincoln Wearever	2773L		0	$11.06	ea	$0.00
372	Loaf Pans (9 1/4 X 5 1/2 X 2 1/2")	Ecko	8022		0	$3.36	ea	$0.00
373	Measuring Cup set metal	AMCO	Small 864		1	$6.53	ea	$6.53
374	Measuring Cup 2 Quart	ABC	GM-2-A		1	$7.42	set	$7.42
375	Measuring Cup 4 Quart	ABC	GM-4-A		1	$10.20	ea	$10.20
376	Meat Tenderizer Aluminum	Intedge	402A		0	$11.00	ea	$0.00
377	Minute Timer (1 hour)	Robertshaw Controls	1929		1	$10.92	ea	$10.92
378	Mixing Bowl (13 qt) S/S	ABC	UBH-13		1	$7.51	ea	$7.51
379	Mixing Bowl (5 qt) S/S	ABC	MBH-05		1	$3.46	ea	$3.46
380	Mixing Bowl (8 qt.) S/S	ABC	MBH-08		1	$5.14	ea	$5.14
381	Mop Bucket	Continental	206-31(B)		1	$19.60	ea	$19.60
382	Mop Bucket Wringer	Continental	206-31(W)		1	$24.10	ea	$24.10
383	Mop Handle (60")	Program Wholesalers	245000		1	$4.62	ea	$4.62
	OR							
384	Mop Handle (60")	Rubbermaid	H236		0	$10.00	ea	$0.00
385	Mop Head (32 oz - large)	Program Wholesalers	Wholslrs32		1	$3.60	ea	$3.60
	OR							
386	Mop Head (32 oz - large)	Rubbermaid	V119		0	$4.10	ea	$0.00
387	Muffin Tins (1/2 cup)	Harold Leonard	1612A		0	$10.32	ea	$0.00
388	Oven Brush 14"	GCS Service	10412		2	$13.60	ea	$27.20
389	Oven Mitts (15") Silicone	Intedge	338S-15		2	$1.60	ea	$3.20
390	Oven Mitts (18") Silicone	Katchall	KT0218		2	$25.48	ea	$50.96
391	Paddle - plastic	Carlisle	4035200		0	$15.72	ea	$0.00
392	Pasta Cooker	Vollrath	68127		0	$146.78	ea	$0.00
393	Pastry Bag (14")	August Thomsen	3114		0	$1.61	ea	$0.00
394	Pastry Bag (18")	August Thomsen	3118		0	$2.00	ea	$0.00
395	Peeler (3")	Harold Leonard	3K		2	$1.29	ea	$2.58
396	Pie Cutter - 7 cut	Harold Leonard	857		0	$11.23	ea	$0.00
397	Pie Pan	Harold Leonard	T-310		0	$1.69	ea	$0.00
398	Plate covers (Estimate will vary)	CUSTOM - GET QUOTE			50	$6.50	ea	$325.00
399	Portion Scale (1/2 oz X 5 lb)	Edlund	SR-2		1	$56.00	ea	$56.00
400	Pot Rack Shelf	AMCO	1248ZPSH		1	$25.89	ea	$25.89
401	Pot Rack Wall Standards	AMCO	WS123ZP		2	$17.01	pair	$34.02
402	Pot Rack Hooks	AMCO	S Hook		12	$0.76	ea	$9.12
403	Push Broom 24"	Carlisle	40587		1	$12.83	ea	$12.83
404	Push Broom Handle/Threaded Plastic Tip	Carlisle	4028500		1	$3.21	ea	$3.21
405	Rapid Kool	Katchall	ALL		1	$24.42	ea	$24.42
406	Roast Pan Cover	Lincoln Wearever	4483		1	$73.89	ea	$73.89
407	Roast Pan	Lincoln Wearever	4483-1/2		1	$78.61	ea	$78.61
408	Roast Pan Cover, Heavy Duty	Vollrath	68392		0	$126.69	ea	$0.00
409	Roast Pan, Heavy Duty	Vollrath	68391		0	$113.74	ea	$0.00
410	Rolling Pin (15") metal	Harold Leonard	1318		1	$23.00	ea	$23.00
411	Salad Spinner	Dito Dean	VSD-10		0	$688.49	ea	$0.00
412	Sauce Pan 10 quart	Lincoln Wearever	4350		1	$26.12	ea	$26.12
413	Sauce Pan 2 3/4 quart	Lincoln Wearever	4342-1/2		2	$12.66	ea	$25.32
414	Sauce Pan 8 1/2 qt	Lincoln Wearever	4843-1/2		2	$23.15	ea	$46.30
415	Sauce Pan Lid 10 quart	Lincoln Wearever	4350C		1	$10.44	ea	$10.44
416	Sauce Pan Lid 2 3/4 qt	Lincoln Wearever	4342C		2	$5.25	ea	$10.50
417	Sauce Pan Lid 8 1/2 qt	Lincoln Wearever	4348C		2	$8.96	ea	$17.92
418	Scraper (3") Griddle	Harold Leonard	2013		1	$2.02	ea	$2.02
419	Scraper Meat Block	Russel Harrington	17040-S496		0	$6.75	ea	$0.00
420	Scraper(Rubber)13 1/2"Spoonula	Rubbermaid	1935		2	$2.18	ea	$4.36
421	Scrub Brush	Carlisle	40526		1	$2.87	ea	$2.87
422	Scrub Brush "Hi-Lo"	Carlisle	40423		1	$6.82	ea	$6.82

Waterview Golf Course
Rowlett, Texas
Smallwares/Startup Package

ITEM #	ITEM DESCRIPTION	MFG	MFG #	Min.	QTY	Unit Price	Unit	EXTENDED
423	Sharpener	Norton	85960		1	$117.92	ea	$117.92
424	Sheet Pan (full) natural	Lincoln Wearever	9001		6	$7.48	ea	$44.88
425	Sheet Pan (half) natural	Lincoln Wearever	5303		6	$4.46	ea	$26.76
426	Skillet Cast Iron (15 1/4")	Lodge	14SK2		0	$26.63	ea	$0.00
427	Skimmer (11 3/4" X 4 1/4")	Vollrath	58840		0	$9.05	ea	$0.00
428	Spatula High Heat 13 1/2"	Rubbermaid	1963		2	$6.80	ea	$13.60
429	Spoon (Kitchen) 13" Pierced	Vollrath	46975		2	$2.13	ea	$4.26
430	Spoon, (Kitchen) 13" Slotted	Vollrath	46980		2	$2.13	ea	$4.26
431	Spoon (Kitchen) 13" Solid	Vollrath	46973		2	$2.13	ea	$4.26
432	Spoon Set	Amco	Small 863		1	$6.79	ea	$6.79
433	Spray Bottle 24 oz, complete	Continental Mfg	924B922H	set	2	$0.81	set	$1.62
434	Spreader (3 1/2") sandwich	Russel Harrington	18100 S2493-1/2		2	$4.78	ea	$9.56
435	Spring Tongs (12") S/S	ABC	UTH-12		6	$3.19	ea	$19.14
436	Spring Tongs (16") S/S	ABC	UTH-16		6	$4.21	ea	$25.26
437	Squeegee, Floor (24")	Ettore	55024		1	$13.28	ea	$13.28
438	Squeegee, Window (12")	Ettore	1013		1	$7.09	ea	$7.09
439	Squeegee Handle for Ettore	Ettore	1628		1	$2.96	ea	$2.96
	OR							
440	Squeegee, Floor (24")	Continental	2400		0	$15.38	ea	$0.00
441	Squeegee, Window(12")	Continental	2472		0	$7.40	ea	$0.00
442	Squeegee Handle for Continental	Carlisle	40261		0	$4.25	ea	$0.00
443	Steel (12")	Fried. Dick Co.	7517130		1	$16.80	ea	$16.80
444	Stock Pot (12 qt)	Lincoln Wearever	4303		1	$29.36	ea	$29.36
445	Stock Pot (24 qt)	Lincoln Wearever	4306		1	$44.00	ea	$44.00
446	Stock Pot (60 qt)	Lincoln Wearever	4315		0	$98.24	ea	$0.00
447	Stock Pot (24 qt) Heavy Duty	Lincoln Wearever	4252		0	$116.52	ea	$0.00
448	Stock Pot (60 qt) Heavy Duty	Lincoln Wearever	4256		0	$183.91	ea	$0.00
449	Stock Pot Cover (12 qt)	Lincoln Wearever	4190		1	$8.52	ea	$8.52
450	Stock Pot Cover (24 qt)	Lincoln Wearever	4192		1	$10.91	ea	$10.91
451	Stock Pot Cover (60 qt)	Lincoln Wearever	4196		0	$15.26	ea	$0.00
452	Strainer 5 1/2 qt (10" China Cap)	Lincoln Wearever	4700		0	$39.64	ea	$0.00
453	Thermometer Refrigerator	Taylor Instruments	5974		12	$2.45	ea	$29.40
454	Thermometer (meat)	Taylor Instruments	5990		2	$10.44	ea	$20.88
455	Thermometer (pocket)	Taylor Instruments	6072-1		2	$10.28	ea	$20.56
456	Tomato Witch 1/4"	Prince Castle	919ABS		1	$216.67	ea	$216.67
457	Tube Set	August Thomsen	9782		0	$21.84	ea	$0.00
458	Turner (8"X3") Round Corner	Russell Harrington	S286-8		4	$12.36	ea	$49.44
459	Urn Brush (30") Coffee Decanter	Carlisle	40000		1	$4.75	ea	$4.75
460	Vacuum Cleaner	Panasonic	MCV300		1	$277.71	ea	$277.71
461	Walkin Curtain 36"	Curtron	M-107		1	$83.24	ea	$83.24
462	Whip French (16")	Best Mfg	16SW		0	$6.81	ea	$0.00
463	Whip French (20")	Best Mfg	20SW		0	$7.94	ea	$0.00
	Subtotal Kitchen/back of house	$8,413.44						
								$27,182.19
	SUBTOTAL SUPPLY AMERICA SMALLWARES							**$0.00**
								$27,182.19
	NET SUBTOTAL							**$2,242.53**
	TAX 8.25%							**$29,424.72**
	TOTAL SUPPLY AMERICA SMALLWARES							

Waterview Golf Course
Rowlett, Texas
Smallwares/Startup Package

ITEM #	ITEM DESCRIPTION	MFG	MFG #	Min.	QTY	Unit Price	Unit	EXTENDED
	MISCELLANEOUS							
	AGC to order direct							
					0	$5,000.00	lot	$0.00
	Artwork	Various			1	$2,285.00	ea	$2,285.00
	Barbeque	Magickitchen			1	$300.00	lot	$300.00
	Baskets - Buffet/counter display				1	$10,000.00	lot	$10,000.00
	Cash registers	Sharp			1	$45.00	ea	$45.00
	Ecolab Simplex				0	$1,250.00	ea	$0.00
	Menu Board - Standard	Chalk Talk			1	$2,000.00	ea	$2,000.00
	Menu Board - Custom	Chalk Talk			0	$10.00	ea	$0.00
	Menu Covers				0	$500.00	lot	$0.00
	Menu Printing				3	$36.00	dz	$108.00
	Pourers 1 1/4 oz. (Public clubs)	Magneusen/Posi Pour	2106	1 dz	0	$36.00	dz	$0.00
	Pourers 1 1/2 oz. (Private clubs)	Magneusen/Posi Pour	2107	1 dz	0	$1,500.00	ea	$0.00
	Vacuum Cleaner - large				0	$300.00	ea	$0.00
	Waste recepticles - interior	Upbeat			0	$500.00	ea	$0.00
	Waste recepticles - exterior	Upbeat						
								$14,738.00
	SUBTOTAL							
								$2,210.70
	FREIGHT 15%							**$1,215.89**
	TAX 8.25%							**$18,164.59**
	TOTAL							
								$47,589.31
	GRAND TOTAL SMALLWARES							
								$0.00
	BUDGET							
								($47,589.31)
	NET							

Waterview Golf Course
Rowlett, Texas
Smallwares/Startup Package

ITEM #	ITEM DESCRIPTION	MFG	MFG #	Min.	QTY	Unit Price	Unit	EXTENDED
	EQUIPMENT--all prices are FOB Factory							
	ORDER THROUGH SUPPLY AMERICA							
	Banquet Bar/Portable - Specify color	Cambro	BAR730		1	$1,791.45	ea	$1,791.45
	Banquet Food Cart	Carter Hoffman	BB1200		1	$3,952.00	ea	$3,952.00
	Banquet Food Cart Tray Slides	Carter Hoffman	Tray slides		1	$247.50	ea	$247.50
	Banquet Food Cart	Carter Hoffman	BB1864		0	$2,788.17	ea	$0.00
	Beer Dispenser, Single Keg, Mobile	Bev Air	BM23		1	$915.75	ea	$915.75
	Bottle Cooler, Flat Top, 4'	TRUE	TD-50-18		0	$1,052.27	ea	$0.00
	Charbroiler, Counter Top, 2'	Wolf	SCB-25-C		0	$1,353.00	ea	$0.00
	Convection Oven, Single	Southbend	GS10SC		0	$3,730.13	ea	$0.00
	Cook & Hold	Alto Sham	1000-TH-1/STD		0	$4,836.70	ea	$0.00
	Display Case, Counter Top	Delfield	9036		0	$1,162.16	ea	$0.00
	OR							
	Display Case, Counter Top-40"	Nor Lake	MR031		0	$1,011.00	ea	$0.00
	OR							
	Display, Counter Top Sandwich	TRUE	GDM-5-PT-S		0	$1,311.26	ea	$0.00
	Food Processor (Plastic)	Robot Coupe	R300		1	$830.83	ea	$830.83
	Food Processor (Metal)	Robot Coupe	R301U		0	$1,055.00	ea	$0.00
	Fryer, 2 Basket-counter top Gas	Frymaster	JICSP		0	$1,213.30	ea	$0.00
	Glass/Mug Froster, 2'	TRUE	T24-GC		1	$1,212.75	ea	$1,212.75
	Griddle, Counter Top, 3'	Wolf	MG-36XXS-C		0	$1,032.90	ea	$0.00
	Griddle, Counter Top, 2'	Wolf	MG-24XXS-C		0	$683.43	ea	$0.00
	Hot Dog Steamer	Star	35SS		0	$280.70	ea	$0.00
	Hot Dog Roller Grill, Bun Warmer & Sneeze Guard	Star	Set		1	$1,182.50	ea	$1,182.50
	Roller grill only		25S		0	$601.70	ea	$0.00
	bun warmer only		SST25		0	$474.10	ea	$0.00
	sneeze guard only		25SG-FC		0	$106.70	ea	$0.00
	Microwave Oven, 800 watt, dial timer	Panasonic	NE8021		0	$265.48	ea	$0.00
	Range, 2 Burner	Wolf	RHP-2-12		0	$402.60	ea	$0.00
	Range, 4 Burner	Wolf	RHP-4-24		0	$676.50	ea	$0.00
	Range with Standard Oven, 6 burner	Wolf	CHR-6-29SS		0	$1,544.40	ea	$0.00
	Refrigerated work table, Self Contained- 60"	TRUE	TUC60		0	$1,613.21	ea	$0.00
	Refrigerator Base, Self Contained - 55"	McCall	LBS2DST		0	$3,254.90	ea	$0.00
	Salad Bar, Camcruiser/Portable-Specify color	Cambro	CVC724		1	$1,857.00	ea	$1,857.00
	Salad Bar/Food Bar, Table Top-Specify Color	Cambro	5FBRTT		0	$438.50	ea	$0.00
	Salad Bar, 5' - Specify color	Cambro	5UBR		1	$735.10	ea	$735.10
	Shelving, 24" x 72" Wire, 5 shelves	Metro	5H577BR		0	$300.85	ea	$0.00
	Slicer, 12"	Berkel	827		0	$1,083.50	ea	$0.00
	Steamer, Counter Top	Groen - HY-PER-STEAM	HY3-E		0	$2,354.00	ea	$0.00
	Table, Sandwich Make-up-4'	TRUE	TSSU-48-8		0	$1,479.56	ea	$0.00
	Table, 30" x 60" S/S Work	Advance	MS-305		0	$364.65	ea	$0.00
	Toaster, Conveyor	Hatco	TRH50		0	$880.00	ea	$0.00
	Toaster, Pop-up	Wells	T4C		0	$504.90	ea	$0.00
	Toaster, Pop-down	Savory	PD-4		0	$508.75	ea	$0.00
	Warmer, Soup/Chili, 11 qt.	Wells	SW-10		1	$177.10	ea	$177.10
	Warmer/Cooker, Soup/Chili, 12 qt.	Tomlinson	28-612-76		0	$349.00	ea	$0.00

Waterview Golf Course
Rowlett, Texas
Smallwares/Startup Package

ITEM #	ITEM DESCRIPTION	MFG	MFG #	Min.	QTY	Unit Price	Unit	EXTENDED
	BANQUET FURNISHINGS--all prices are FOB Factory							
	ORDER THROUGH SUPPLY AMERICA							
	Rabo Enterprises							
	Portable Garmet Rack (hangers from pro shop)	Rabo Enterprises	6' x 6'		0	$168.14	ea	$0.00
	Claridge							
	Presentation Easel (29"x40")	Claridge	LCS105		0	$148.23	ea	$0.00
	Vinyl carring case for easel	Claridge	133		0	$30.86	ea	$0.00
	4 pads of unruled paper	Claridge	105PD		0	$42.59	ea	$0.00
	Square flip over mobile training board w/castors 4'x6'	Claridge	LCS59-1		0	$325.49	ea	$0.00
	5' brushed gold A-fram anodized	Claridge	175E		0	$85.31	ea	$0.00
	Forbes							
	Banquet Bar/Portable, specify finish	Forbes	4861		0	$2,220.00	ea	$0.00
	Standing Lectern, specify finish	Forbes	4895		0	$753.50	ea	$0.00
	Table Lectern, specify finish	Forbes	4984		0	$220.00	ea	$0.00
	Sico							
	Stage (6'x8'x16-24"h), carpeted, specify color	Sico	1812-624		0	$1,212.75	ea	$0.00
	2 step stage riser, carpeted, specify color	Sico	1436-016		0	$249.15	ea	$0.00

Waterview Golf Course
Rowlett, Texas
Smallwares/Startup Package

ITEM #	ITEM DESCRIPTION	MFG	MFG #	Min.	QTY	Unit Price	Unit	EXTENDED
	BANQUET FURNISHINGS--all prices are FOB Factory--ORDER THROUGH HOME OFFICE							
	Kodak 4400 Slide Projector	Boise Cascade	L11125236		0	$293.75	ea	$0.00
	Slide Projector Lens	Boise Cascade	L1163-4500		0	$59.64	ea	$0.00
	Overhead Projector	Boise Cascade	L11707		0	$189.84	ea	$0.00
	Quartet tripod Projection Screen	Boise Cascade	E4560S		0	$121.99	ea	$0.00
	Sony TV/VCR Combo	Boise Cascade	SON-KV20VM40		0	$617.45	ea	$0.00
	Projection cart 54"	Boise Cascade	E488754		0	$255.00	ea	$0.00
	Chairs, banquet							
	Stacking banq. chair w/vinyl Designer must	MTS	589HH					
	specify color and frame finish		Grade 3 fabric		0	$53.58	ea	$0.00
			Grade 5 fabric		0	$59.14	ea	$0.00
	Stacking chair cart	MTS			0	$65.00	ea	$0.00
	Chairs, folding wedding							
	White Resin Folding	Allibert	42026		150	$30.98	ea	$4,647.00
	OR							
	Polyfold alum. frame/plastic seat folding chair	Krueger Int.	970/EWH/E		0	$17.97	ea	$0.00
	Dance floor							
	Floorlok portable dance floor 21'x24'	Floorlok	Confirm size		0	$6,160.70	lot	$0.00
	5-1/4" edging and trolley, parquet							
	Tables							
	66" diam. round tables	Mity-Lite	CT-66-FL		15	203.40	ea	$3,051.00
	Table carts 42-1/4" wide (requires double door frame)	Mity-Lite	CMS-72		2	241.00	ea	$482.00
	30"x72" rectangular tables	Mity-Lite	RT-3072-F		6	137.70	ea	$826.20
	30"x60" serpentine tables	Mity-Lite	ST-3060-F		2	200.25	ea	$400.50
	30"x96" rectangular tables	Mity-Lite	RT-3096-F		6	148.50	ea	$891.00
	60" diam. half round tables	Mity-Lite	HR-60-F		2	149.85	ea	$299.70
	30" diam. quarter round tables	Mity-Lite	QR-30-F		2	121.50	ea	$243.00
	Table carts for 30x96&72	Mity-Lite	CMS-3096		2	193.50	ea	$387.00
	30" diam. cocktail tables (folding)	Mity-Lite	CT-30-F		0	122.85	ea	$0.00
	2-tier catering table w/castors	Mity-Lite	MB-3072-16		2	293.40	ea	$586.80
	Miscellaneous banquet furnishings							
	State flag (interior), 3'x5' (CA)	Upbeat	Varies Per State		0	79.00	ea	$0.00
	US flag (interior), 3'x5'	Upbeat	BRC-2703		0	69.00	ea	$0.00
	Flag poles - 8' dark oak	Upbeat	BRC-2608		0	62.00	ea	$0.00
	Gold finish display stand	Upbeat	BRC-2680		0	49.00	ea	$0.00
	Gold Finish Eagle Orn. (U.S. flag)	Upbeat	BRC-B2632		0	22.00	ea	$0.00
	Gold Finish Spear Orn (State flag)	Upbeat	BRC-9999-26381		0	22.00	ea	$0.00
	Sngl Ped Frame Stand (11"x14")	Upbeat	GRO-F41114		0	136.00	ea	$0.00
	Plexi for Frame Stand above	Upbeat	GRO-PW1114		0	13.00	ea	$0.00
	Banquet Function Book	Hodges & Irvine			2	$175.00	ea	$350.00
	Banquet Buffet Display							
	Serving Stone Tray Rectangular (lapis blue)	Gourmet Display	SS35REC		1	$198.00	ea	$198.00
	Serving Stone Tray Oval (polar White)	Gourmet Display	SS35OVAL		1	$198.00	ea	$198.00
	Serving Stone Tray Octagon - Gray Granite	Gourmet Display	SS29OCT		1	$217.25	ea	$217.25
	Oval triple tier Mirror	Gourmet Display	MT30 OVAL		1	$308.00	ea	$308.00
	Rainbow w/o Color Wheel	Gourmet Display			1	$547.25	ea	$547.25

Waterview Golf Course
Rowlett, Texas
Smallwares/Startup Package

ITEM #	ITEM DESCRIPTION	MFG	MFG #	Min.	QTY	Unit Price	Unit	EXTENDED
	Misc Suppliers							
	Piano				0	$3,000.00	ea	$0.00
	Wedding Arch	Double T			0	$1,000.00	ea	$0.00
	Wedding Gazebo	Double T			0	$1,500.00	ea	$0.00
	SUBTOTAL EQUIPMENT & BQT FURNISHINGS							**$26,534.68**
	FREIGHT 15%							**$3,980.20**
	TAX 8.25%							**$2,189.11**
	TOTAL							**$32,703.99**
	GRAND TOTAL							**$80,293.30**
	Contingency 10%							**$8,029.33**
	BUDGET							**$0.00**
	PACKAGE TOTAL							**($88,322.63)**

EXHIBIT "C"

COMMENCEMENT DATE CONFIRMATION NOTICE

DATE: _____

City of Rowlett
P.O. Box 99
Rowlett, Texas
Attn: City Manager

Re: Lease dated _____, 1999 between City of Rowlett, Texas, as Lessor, and American Golf Corporation, a California corporation, as Lessee (the "Lease")

Please acknowledge the following:

1. The Commencement Date of the Lease is _____, 19___.

2. The expiration date of the Lease term is December 31, 19___, subject to two (2) successive five (5) year options to extend.

Very truly yours,

"LESSEE"

AMERICAN GOLF CORPORATION

By: _____
Its: _____

Lessor hereby confirms the information set forth above.

"LESSOR"

CITY OF ROWLETT, a municipal corporation

By:_____

Its:_____

Date:_____, 19__

EXHIBIT "D"

Golf Course Completion Items

The following is a list of golf course completion items to be addressed by Lessor. These items are separate and apart from the punchlist items to be identified by Lessor and Lessee and corrected by Lessor pursuant to Paragraph 13.1(d) of the Lease.

1. *Quick Coupler Location*. The irrigation quick coupler valves were installed approximately 70 feet from the green edges. To facilitate green syringing during hot weather, the quick coupler should be relocated to within 5 feet of the green edges.

2. *Native Area Erosion Repair*. The native areas need to be pulverized, regraded and reseeded with a blend of native grasses including blue stem, muhli, blue grama, side oats grama, prairie buffalo grass and annual rye grass. Reseeding should begin in the fall to achieve maximum establishment.

3. *Path from Maintenance Facility to Golf Course*. A cart path or a reasonable substitute should be installed to form a pathway from the maintenance facility to the golf course in order to avoid the need to traverse county roads or the adjacent development area.

4. *Water Jet Course Drains*. To be installed.

5. *Irrigation Coverage*. Additional irrigation heads should be installed, as appropriate, in the roughs and greens.

6. *Cleaning of Drains*. All drains on the golf course need to be pumped out. The drains are filled with silt and are clogged.

7. *Pump Station*. The interior of the pump station needs to be completed including installation of lights, walls and heater.

8. *As-Built Irrigation Plans*. Lessor must provide Lessee with as-built plans to facilitate on-going maintenance of the irrigation system.

ATTACHMENT 1

MAYOR
H.K. "Buddy" Wall
MAYOR PRO TEM
C. Shane Johnson
DEPUTY MAYOR
PRO TEM
Al Alberts

Rowlett

CITY COUNCIL
David R. Johnson
Jim Paulissen
Pam Swindling
Michael D. Zang
CITY MANAGER
Mike Gibson

August 31, 1999

Theodore F. Kahan
General Counsel
American Golf Corporation
2951 28th Street
Santa Monica, Ca 90405

Re: Lease between City of Rowlett, Texas and American Golf Corporation

Dear Ted,

I met with Dale Miller concerning the path from the maintenance building to the Golf Course as outlined in Exhibit "D", section 3 of the Lease. What I proposed to Dale Miller is as follows and would be a substitute for the language in that section.

✓ The City would install signs on that portion of Princeton Road from the maintenance facility to the cart path adjacent to the driving range, to alert drivers that there is machinery on the roadway and to drive with caution.

✓ When development occurs along Princeton Road, which would generate additional traffic and create an unsafe crossing route for golf course machinery, the City, at the time of Princeton Road construction, would add an eight foot wide equipment path adjacent to the road from the maintenance facility to the driving range cart path.

If you agree with the above, please sign where applicable and return the original which will become an attachment to Exhibit "D".

Sincerely,

Mike Gibson

Mike Gibson
City Manager

Approved:

By: _____ Date signed: 9/7/99
Theodore F. Kahan, General Counsel
American Golf Corporation

EXHIBIT "E"

Plans for Remaining Work

The Remaining Work shall be comparable in terms of quality of construction methods, materials and finishes to the clubhouse and other golf course improvements currently being constructed by Lessee at Pecan Valley Golf Club, San Antonio, Texas. A copy of the cover page of the project manual for the Pecan Valley Golf Club and the drawing index for the Pecan Valley plans and specifications is attached hereto as **Schedule "A"**. In addition, the Remaining Work shall be constructed in a manner consistent with the site plan, floor plan, kitchen equipment plan and pro shop plan, which are attached hereto as **Schedules "B" through "E"**, respectively. Finally, the Remaining Work will be constructed in accordance with the Budget attached hereto as **Schedule "F"**.

Prior to commencing any of the Remaining Work, Lessor shall submit to Jan Brindle, on behalf of Lessee, subcontractor and supplier submittals for Mr. Brindle's prior written approval. Mr. Brindle's approval shall not be unreasonably withheld or delayed. It is understood and agreed that there shall be no changes to any aspect of the Remaining Work approved by Lessee without Lessee's prior written consent, which consent may be granted or withheld in Lessee's sole and absolute discretion.

Schedule "A"

PROJECT MANUAL
PECAN VALLEY GOLF CLUB
CLUBHOUSE, CART BARN, AND MAINTENANCE FACILITY

Permit Set
March 31, 1999

Marsh & Associates, Inc.
ARCHITECTURE • PLANNING • INTERIORS
The Quorum at DTC • 7995 East Prentice Avenue, Suite 102
Greenwood Village, Colorado 80111
ph. 303 / 290-6461 • fax 303 / 290-6459

PLANS DATED MARCH 31, 1999

DRAWING INDEX

A0.0 COVER SHEET

LANDSCAPE

L1 LANDSCAPE PLAN / TREE LAYOUT
L2 CLUBHOUSE PLANTING PLAN
L3 MAINTENANCE PLANTING PLAN
L4 CART BARN PLANTING PLAN
L5 GENERAL LANDSCAPE NOTES AND DETAILS

DESIGN

A0.1 CLUBHOUSE CODE ANALYSIS
A0.2 CART BARN CODE ANALYSIS
A0.3 MAINTENANCE CODE ANALYSIS
A0.4 PROJECT PLAT SHEETS

A1.0 OVERALL SITE PLAN
A1.1 ENLARGED CLUBHOUSE SITE PLAN
A1.2 ENLARGED CART BARN SITE PLAN
A1.3 ENLARGED MAINTENANCE BLDG. SITE PLAN
A1.4 SITE DETAILS

A2.0 WALL ASSEMBLIES
A2.1 CLUBHOUSE FLOOR PLAN
A2.2 CART BARN FLOOR PLAN
A2.3 MAINTENANCE FLOOR PLAN

A3.1 CLUBHOUSE REFLECTED CEILING PLAN
A3.2 CART BARN REFLECTED CEILING PLAN
A3.3 MAINTENANCE REFLECTED CEILING PLAN

A4.1 CLUBHOUSE ROOF PLAN
A4.2 CART BARN ROOF PLAN
A4.3 MAINTENANCE ROOF PLAN

A5.1 CLUBHOUSE EXTERIOR ELEVATIONS
A5.2 CART BARN EXTERIOR ELEVATIONS
A5.3 MAINTENANCE EXTERIOR ELEVATIONS

A6.1 BUILDING SECTIONS
A6.2 BUILDING SECTIONS
A6.3 WALL SECTIONS
A6.4 WALL SECTIONS
A6.5 WALL SECTIONS
A6.6 CART BARN BLDG./WALL SECTIONS
A6.7 MAINTENANCE BLDG. SECTIONS
A6.8 MAINTENANCE WALL SECTIONS
A6.9 PAVILLION AND BBQ SECTIONS

A7.1 FIREPLACE DRAWINGS AND DETAILS

A8.1 EXTERIOR DETAILS

A9.1 INTERIOR DETAILS
A9.2 INTERIOR DETAILS

A10.1 DOOR / WINDOW SCHEDULES
A10.2 DOOR / WINDOW DETAILS

A11.1 INTERIOR ELEVATIONS
A11.2 RESTROOM PLANS / ELEVATIONS

A12.1 PRO SHOP PLANS / DETAILS
A12.2 CONTROL COUNTER PLAN
A12.3 CONTROL COUNTER DETAILS
A12.4 CONTROL COUNTER ELEVATIONS
A12.5 PRO SHOP MILLWORK
A12.6 PRO SHOP MILLWORK

STRUCTURAL

S1.0 GENERAL NOTES
S1.1 TYPICAL DETAILS
S1.2 TYPICAL DETAILS

S2.1 CLUBHOUSE FOUNDATION PLAN
S2.2 CART BARN FOUNDATION PLAN
S2.3 MAINTENANCE BLDG. FOUNDATION PLAN

S3.1 CLUBHOUSE ROOF FRAMING PLAN
S3.2 CART BARN ROOF FRAMING PLAN
S3.3 MAINTENANCE BLDG. ROOF FRAMING PLAN

S4.1 FOUNDATION DETAILS

S5.1 DETAILS
S5.2 DETAILS
S5.3 DETAILS

MECHANICAL

M1.1 MAIN CLUBHOUSE FLOOR PLAN - HVAC
M1.2 MAIN CLUBHOUSE ROOF MECHANICAL PLAN - HVA

M2.1 CART BARN FLOOR PLAN - HVAC

M3.1 MAINTENANCE BLDG. FLOOR PLAN - HVAC

M4.1 DETAILS

PLUMBING

P1.1 CLUBHOUSE AND KITCHEN PLUMBING PLAN

P2.1 CART BARN PLUMBING PLUMBING PLAN

P3.1 MAINTENANCE BLDG. PLUMBING PLAN

P4.1 PLUMBING FIXTURE SCHEDULE
P4.2 PLUMBING DETAILS
P4.3 PLUMBING RISER DIAGRAMS

ELECTRICAL

E1.1 CLUBHOUSE POWER PLAN
E1.2 CART BARN POWER PLAN
E1.3 MAINTENANCE BLDG. POWER PLAN
E1.4 CLUBHOUSE ROOF POWER PLAN

E2.1 CLUBHOUSE LIGHTING PLAN
E2.2 CART STORAGE LIGHTING PLAN
E2.3 MAINTENANCE BLDG. LIGHTING PLAN

E3.1 PANEL SHEDULES & ONE-LINE
E3.2 PANEL SHEDULES & ONE-LINE
E3.3 PANEL SHEDULES & ONE-LINE

E4.1 ENLARGED KITCHEN POWER PLAN

FOOD SERVICE

FS1.1 EQUIPMENT PLANS/SCHEDULES
FS1.2 VENTILATION PLAN/SCHEDULE
FS1.3 PLUMBING PLAN/SCHEDULE
FS1.4 ELECTRICAL PLAN/SCHEDULE

FS2.1 KITCHEN HOOD DRAWING

FS3.1 EQUIPMENT DETAILS
FS3.2 EQUIPMENT DETAILS
FS3.3 EQUIPMENT DETAILS

ATTACHMENT 1

Schedule B

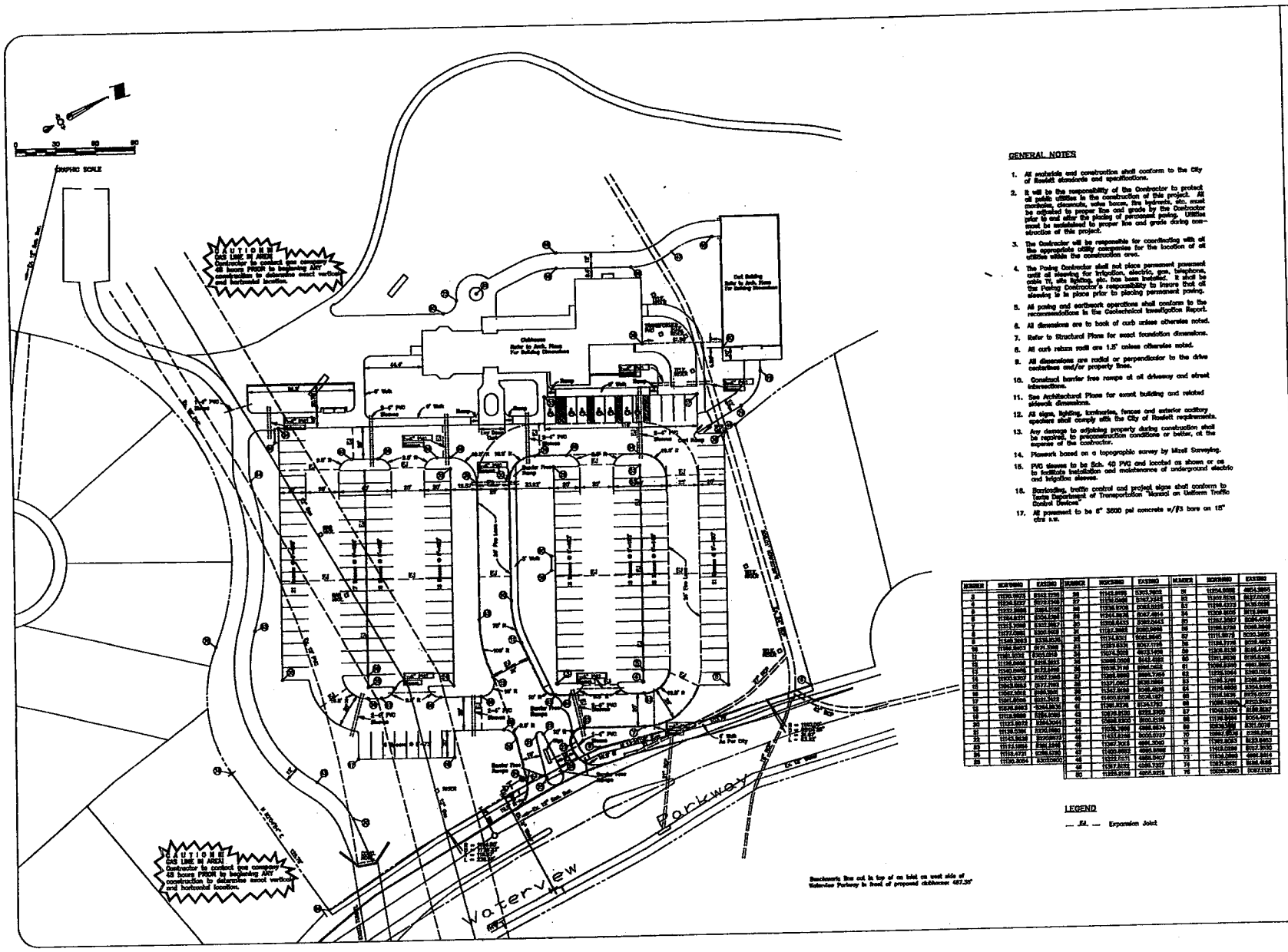

GENERAL NOTES

1. All materials and construction shall conform to the City of Rowlett standards and specifications.
2. It will be the responsibility of the Contractor to protect all public utilities in the construction of this project. All manholes, cleanouts, valve boxes, fire hydrants, etc. must be adjusted to proper line and grade by the Contractor prior to and after the placing of permanent paving. Utilities must be established to proper line and grade during construction of this project.
3. The Contractor will be responsible for coordinating with all the appropriate utility companies for the location of all utilities within the construction area.
4. The Paving Contractor shall not place permanent pavement until all sleeving for irrigation, electric, gas, telephone, cable TV, site lighting, etc. has been installed. It shall be the Paving Contractor's responsibility to insure that all sleeving is in place prior to placing permanent paving.
5. All paving and earthwork operations shall conform to the recommendations in the Geotechnical Investigation Report.
6. All dimensions are to back of curb unless otherwise noted.
7. Refer to Structural Plans for exact foundation dimensions.
8. All curb return radii are 1.5' unless otherwise noted.
9. All dimensions are radial or perpendicular to the drive centerlines and/or property lines.
10. Construct barrier free ramps at all driveway and street intersections.
11. See Architectural Plans for exact building and related sidewalk dimensions.
12. All signs, lighting, luminaries, fences and exterior auditory speakers shall comply with the City of Rowlett requirements.
13. Any damage to adjoining property during construction shall be repaired, to preconstruction conditions or better, at the expense of the contractor.
14. Planwork based on a topographic survey by Mizell Surveying.
15. PVC sleeves to be Sch. 40 PVC and located as shown or as to facilitate installation and maintenance of underground electric and irrigation sleeves.
16. Barricading, traffic control and project signs shall conform to Texas Department of Transportation "Manual on Uniform Traffic Control Devices".
17. All pavement to be 6" 3600 psi concrete w/#3 bars on 18" ctrs b.w.

NUMBER	NORTHING	EASTING	NUMBER	NORTHING	EASTING	NUMBER	NORTHING	EASTING
1	11795.9925	5315.1750	26	11143.8969	5303.9003	51	11004.9988	4804.3905
2	11794.5277	5272.1745	27	11116.8408	5302.2214	52	11009.8025	4817.0008
3	11803.8888	5266.1745	28	11116.8028	5301.0025	53	11196.4373	4838.0928
4	11803.8888	5266.1745	29	11044.8438	5047.0914	54	11300.8025	4918.8888
5	11844.8123	5266.1745	30	11000.8433	5080.5443	55	11382.3987	5084.4918
6	11813.1888	5303.8811	31	11017.3888	5080.8848	56	11382.3987	5088.8848
7	11777.3888	5303.8811	32	11017.3888	5080.8848	57	11115.8973	5000.1880
8	11795.9925	5315.1750	33	11015.8301	5081.8848	58	11115.8973	5000.1880
9	11795.9925	5315.1750	34	10911.8326	5017.1188	59	11108.7138	5004.4883
10	11795.9925	5315.1750	35	10911.8326	5017.1188	60	11108.7138	5004.4883
11	11795.9925	5315.1750	36	10911.8326	5017.1188	61	11108.7138	5004.4883
12	11795.9925	5315.1750	37	10911.8326	5017.1188	62	11108.7138	5004.4883
13	11795.9925	5315.1750	38	10911.8326	5017.1188	63	11108.7138	5004.4883
14	11795.9925	5315.1750	39	10911.8326	5017.1188	64	11108.7138	5004.4883
15	11795.9925	5315.1750	40	10911.8326	5017.1188	65	11108.7138	5004.4883
16	11795.9925	5315.1750	41	10911.8326	5017.1188	66	11108.7138	5004.4883
17	11795.9925	5315.1750	42	10911.8326	5017.1188	67	11108.7138	5004.4883
18	11795.9925	5315.1750	43	10911.8326	5017.1188	68	11108.7138	5004.4883
19	11795.9925	5315.1750	44	10911.8326	5017.1188	69	11108.7138	5004.4883
20	11795.9925	5315.1750	45	10911.8326	5017.1188	70	11108.7138	5004.4883
21	11795.9925	5315.1750	46	10911.8326	5017.1188	71	11108.7138	5004.4883
22	11795.9925	5315.1750	47	10911.8326	5017.1188	72	11108.7138	5004.4883
23	11795.9925	5315.1750	48	10911.8326	5017.1188	73	11108.7138	5004.4883
24	11795.9925	5315.1750	49	10911.8326	5017.1188	74	11108.7138	5004.4883
25	11795.9925	5315.1750	50	10911.8326	5017.1188	75	11108.7138	5004.4883

LEGEND

— EJ — Expansion Joint

RLK ENGINEERING
803 E. Main St., Suite B Allen, Texas 75002
972-359-1733 Fax 972-359-1835

Horizontal Control and Paving Plan
Clubhouse
Waterview Golf Club
City of Rowlett, Texas

Revisions	Date
1	
2	
3	
4	
5	
6	
7	
8	
9	
10	

Issue Date: 03/19/99

Scale: 1"=30'
Drawn By: RLK
Checked by: RLK

Sheet C 1 of 11

Project No. 99022

ATTACHMENT 1

Schedule C

DIMS ARE EXT. FACE OF GYP TO EXT. FACE OF GYP.

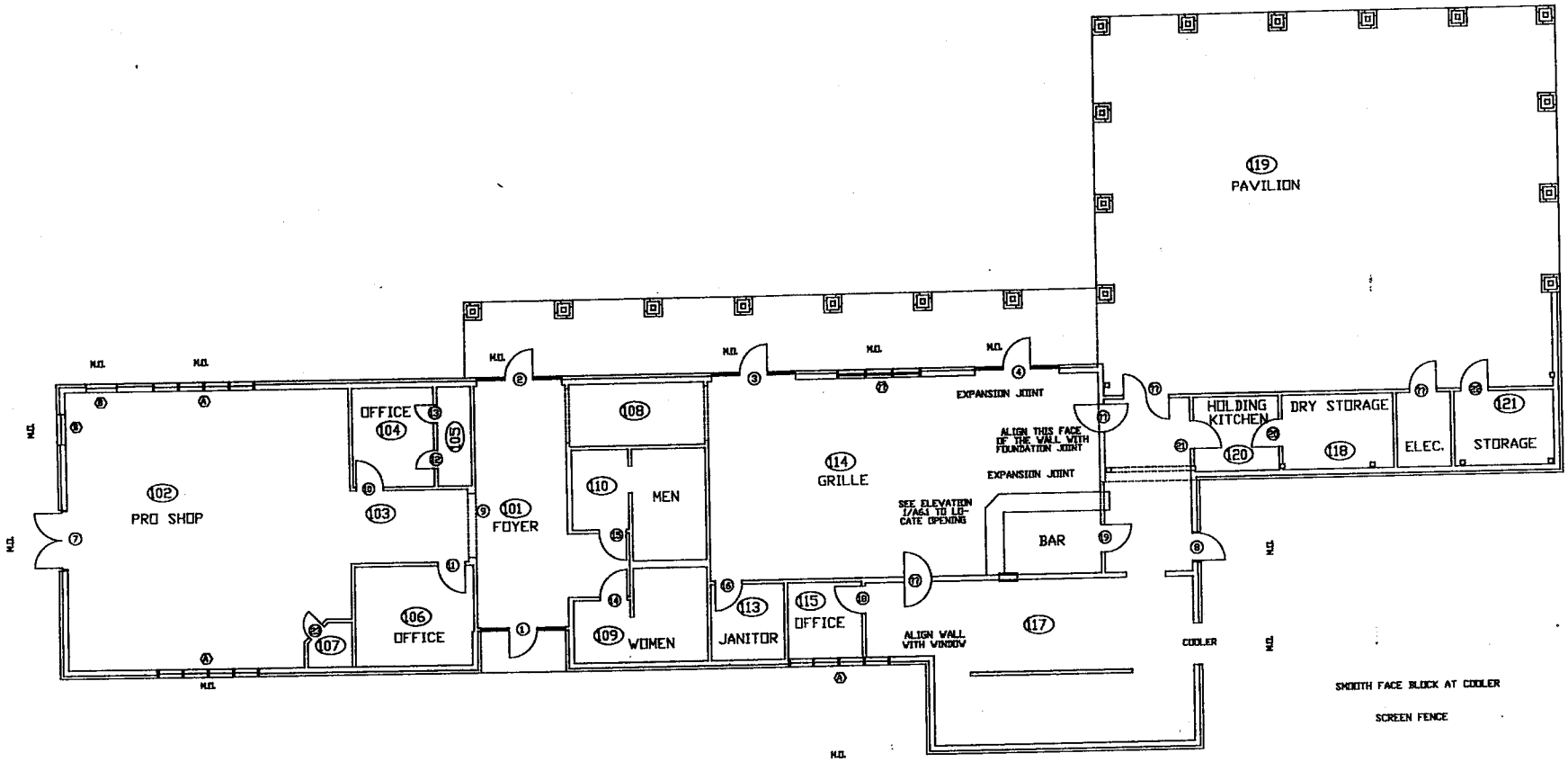

0 1 2 3 4 5 10 15 20
SCALE

THIS DRAWING IS UNCHECKED. GALLAGHER CONSTRUCTION MANAGEMENT SERVICES HAS GENERATED THIS DRAWING TO COMPLIMENT THE DESIGN DRAWINGS DUE TO THE NUMEROUS CHANGE ORDERS ISSUED AS A RESULT OF VALUE ANALYSIS EACH OF THE CONTRACTORS ARE TO REVIEW THIS DRAWING AND PROVIDE INPUT TO GCMS CONCERNING ANY DISCREPANCIES, DESIGN, OR DIMENSIONAL ERRORS.

1 04/29/99 REVISED PER COMMENTS 2 05/21/99 REVISED PER COMMENTS	DRAWN BY G.H. CHAMBERLAIN	GALLAGHER CONSTRUCTION MANAGEMENT SERVICES	WATERVIEW GOLF CLUB CLUB HOUSE	FLOOR PLAN 3

ATTACHMENT 1

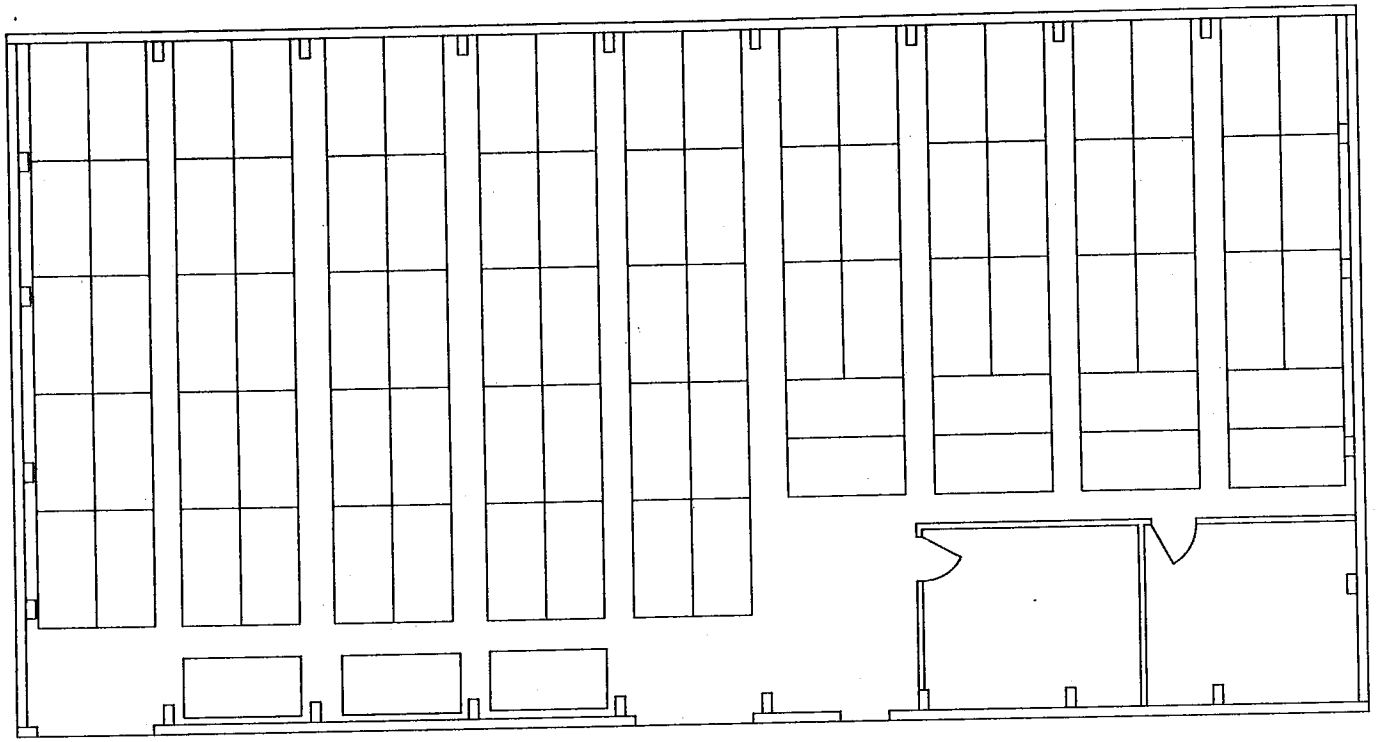

0	05/26/99	INITIAL ISSUE

STRUCTURAL ENGINEER
E.S. WRIGHT & ASSOCIATES
CONSTRUCTION CONSULTANTS, ENGINEERS
603 TIFFANY TRAIL, RICHARDSON , TEXAS 75081
OFFICE 972-669-8089

GALLAGHER CONSTRUCTION MANAGEMENT SERVICES

WATERVIEW GOLF CLUB
CART BUILDING

FLOOR PLAN

CB2

ATTACHMENT 1

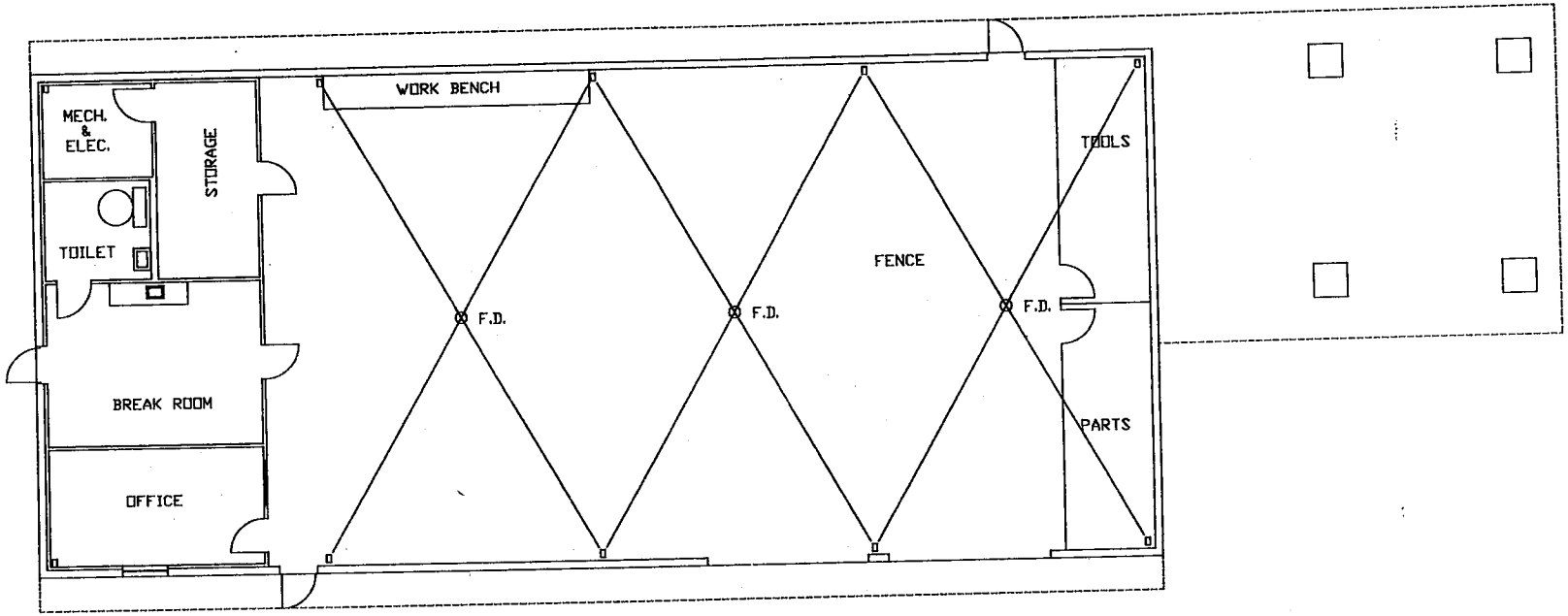

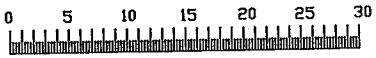

SCALE

SEE ISSUES LIST FOR OPEN ITE

0	4/27/99	REVIEW & COMMENT
1	06/07/99	2ND REVIEW

STRUCTURAL ENGINEER
E.S. WRIGHT & ASSOCIATES
CONSTRUCTION CONSULTANTS, ENGINEERS
603 TIFFANY TRAIL, RICHARDSON , TEXAS 75081
OFFICE 972-669-8089

GALLAGHER CONSTRUCTION
MANAGEMENT SERVICES

WATERVIEW GOLF CLUB
MAINT. BUILDING

FLOOR PLAN 5

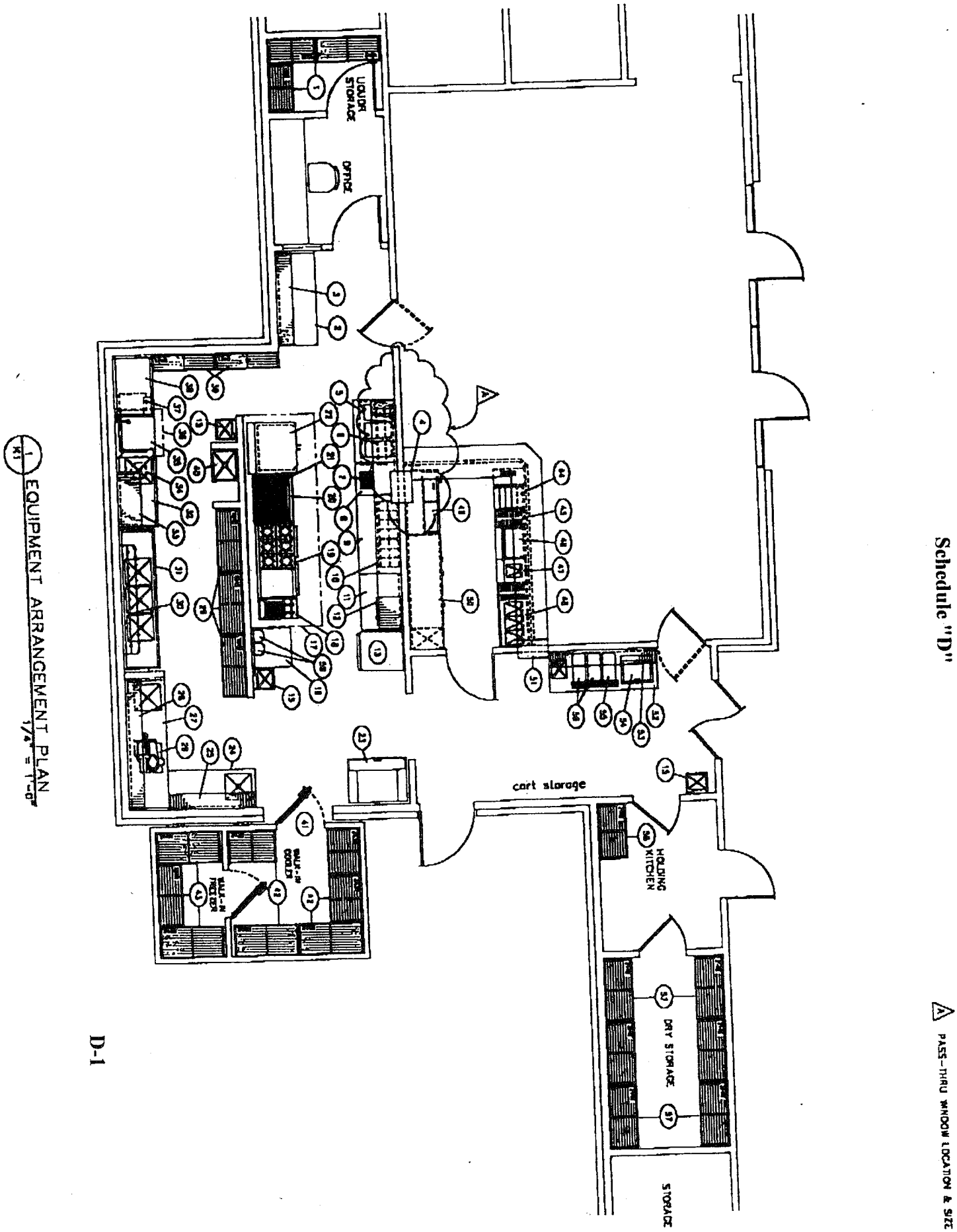
LIQUOR STORAGE
OFFICE
cart storage
HOLDING KITCHEN
DRY STORAGE
STORAGE
WALK-IN COOLER
WALK-IN FREEZER
PASS-THRU WINDOW LOCATION & SIZE
EQUIPMENT ARRANGEMENT PLAN
1/4" = 1'-0"

Schedule "D"

MAY-25-99 TUE 12:00 PM GERNSBACHERS INC FAX NO. 8178771211

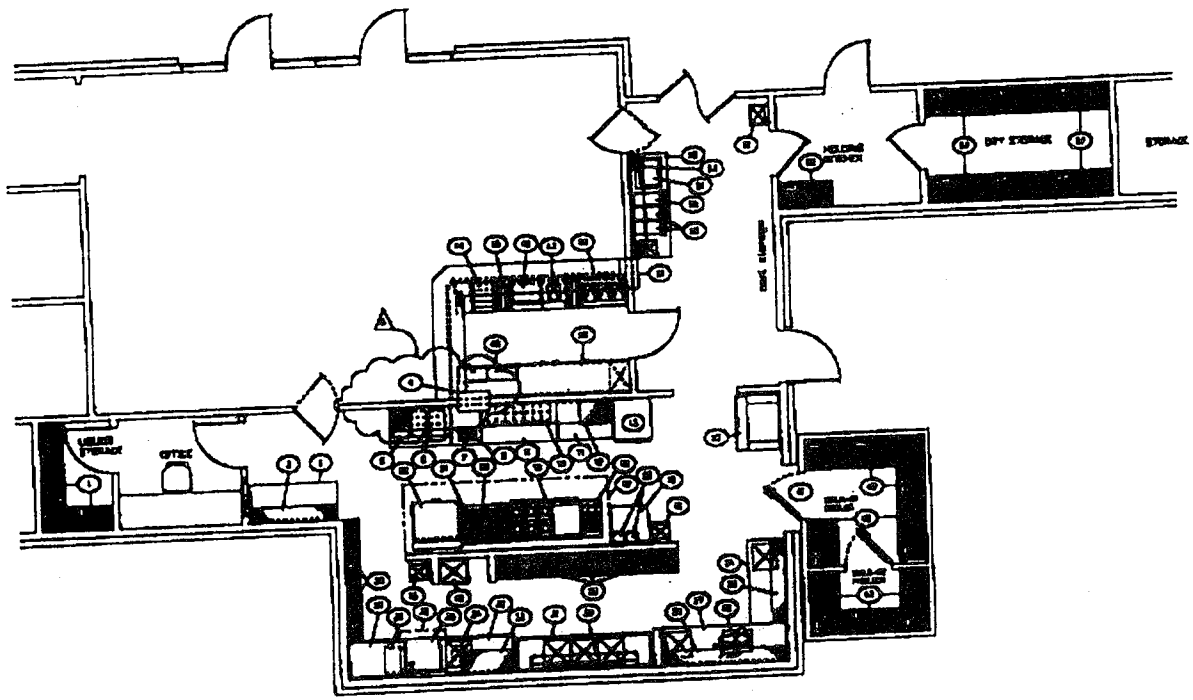

EQUIPMENT ARRANGEMENT PLAN
1/8" = 1'-0"

EQUIPMENT LEGEND

1	LARGE STORAGE SHELVES	2
2	PROP RACK	
3	DISPENSER	
4	PAPER RACK	
5	DRY PAPER DISPENSER	
6	HEAT LAMP	2'-4"
7	CHAIRS	
8	STEPLADDER	
9	FIRE EXTINGUISHER	10# PLASTIC/CHEMICAL
10	SINGLE DISPENSER/BIN	10" WIDE
11	UNDERCOUNTER FRIDGE	
12	DISHWASHER	
13	SINGLE-IN DISHWASHER	
14	SINK DRAINER	
15	BAKE SINK	3
16	WORK TABLE	
17	DISPLAY CASE	
18	FRYER	
19	BAKER/GRILL	6FT DOUBLE
20	DISH-MACHINE	
21	DISHWASHER STAND	
22	DISPENSER BIN	
23	ICE MACHINE	
24	PREP TABLE	6FT DBL
25	DISPENSER	
26	SLICER	
27	PREP TABLE	6FT DBL
28	DISPENSER	
29	SINK SHELVES	1
30	POT SINK	
31	POT RACK	
32	SHELVES DISPENSER	
33	RACK SHELF	
34	DISPENSER	
35	DISPENSER	
36	DISPENSER HOOK	
37	DISPENSER HOOKS	
38	SLICER DISPENSER	
39	SINK SHELVES	1
40	SINK SINK	
41	VALLEY GRILLE/FRYER	
42	SALE-IN GRILLE SHELVES	1
43	SALE-IN FRYER SHELVES	2
44	LARGE DISPLAY	
45	DISPENSER	
46	MEDICAL DRYER	
47	SINK SINK	
48	SINK DISPENSER/ SINK	
49	BATTLE SINK	
50	RACK GAS DISPENSER BIN	
51	PREP SHELF	
52	STORAGE COUNTER	
53	DISPENSER	
54	SINK DISPENSER	
55	ICE DISPENSER	
56	COFFEE DISPENSER	1
57	DRY STORAGE SHELVES	1
58	TWO-IN-ONE SHELVES	
59	FIRE EXTINGUISHER STAND	

D-2

GERNSBACHER'S, INC.

WATERVIEW GOLF CLUB

MAY 25,1999

QUOTATION

Project:
WATERVIEW GOLF CLUB
CITY OF ROWLETT
ROWLETT, TX

From:

DANNY RICHARDSON
GERNSBACHER'S, INC.
508 CARROLL STREET
P.O. BOX.9090
FT. WORTH, TX 76147
(817) 877-0377 Fax: (817) 879-1429

To:

Item	Qty	Description	Sell Each
1	1	SHELVING Metro LIQUOR STORAGE SHELVING, ONE LOT CONSISTING OF THE FOLLOWING:	
	10	1836BR Shelving, Wire, 18" wide, 36" long, zinc-coated finish	82.48
	5	1848BR Shelving, Wire, 18" wide, 48" long, zinc-coated finish	25.72
	12	74P Post, Chrome finish, 74 5/8" high	8.65
			424.44
2	1	WORK TABLE Metal Masters Model No. T3072SE-BS Work Table, stainless steel top, 30" wide top, with splash at rear only, 72" long, w/adjustable undershelf, s/s frame & shelf, 14 gauge, type 304 stainless steel top	133.28
3	1	SHELF, WALL-MOUNTED Metal Masters Model No. WS1272-16/4 Shelf, Wall-Mounted, 16 gauge 430 stainless steel, 12" wide, 6 feet long	135.00
4	1	SHELF Custom PASS THRU SERVICE SHELF ONLY, 18"X36", 304 STAINLESS STEEL, WINDOW CUT-OUT BY OTHERS, OPENING FINSHED BY OTHERS.	13,502.78
5	1	CHEF STATION Delfield Model No. 14E1348 48' long electric hot food table with drains and manifold, manual fill faucet, full length plate shelf and open storage below, stainless steel base end on left, 10"x48"x1/2" composite cutting board component of custom chef station, the total price for the entire unit is reflected here	
6	1	HEAT LAMP Delfield Model No. 610G 5'0" heat lamp component of chef station	532.0
7	1	TOASTER, POP-UP Wells Model No. T-4C 15A Toaster, Pop-Up, 4-slice bread toaster, stainless steel finish, 1-1/4" slots, approx. 150 slices/hour capacity, with solid-state electronic controls, 120V, 1ph, 1800 W, cordset, NEMA 5-15P	
8	1	UTILITY COUNTER Delfield Model No. 20SS24 24" long utility stand component of chef station	
9	1	REFRIGERATION Delfield Model No. 18RC60L 60" self contained refrig base, reduced heigth rail (Bloomington Style) w/hinged removable covers, 19" and 27" door, 20"x60"x1/2" composite cutting board, compressor on the left	

Y 25,1999

WATERVIEW GOLF CLUB

Item	Qty	Description	Sell Each	Sell Total
		component of chef station		
10	1	SHELF Delfield Model No. 605C2 72" long double over shelf component of chef station		
10.1	1	SHELF Delfield 103" long over shelf, 79" long single tier overshelf component of chef station		
11	1	FREEZER Delfield Model No. 18FC43L 43" long (1) section under counter self-contained freezer base with compressor on the left, one 19" door, s/s base end on right component of chef station	810.04	810.04
12	1	OVEN, MICROWAVE Amana Model No. RFS11B Oven, Microwave, 1100 watts, stainless steel, single shelf, with programmable timer, side hinged door, Full three year warranty, 20 AMP, 120 V	2,566.85	2,566.85
13	1	REFRIGERATOR, REACH-IN Traulsen Model No. G10000 Refrigerator, Reach-in, One-Section, Self-Contained Refrig System, aluminum exterior and interior, s/s front & doors, standard depth cabinet, wide half-height doors, with exterior digital thermometer, doors to be hinged on the right	77.00	77.00
	1	add'l 4-year compressor warranty (net)		
14		Spare Number	119.46	238.92
15	2	HAND SINK Krowne Metal Model No. HS-2 Hand Sink, wall model, 10" wide x 14" front/back x 6" deep, all stainless steel construction, with gooseneck faucet	293.44	293.44
16	1	WORK TABLE Metal Masters Model No. T3030SB-BS Work Table, stainless steel top, 30" wide top, with splash at rear only, 30" long, w/adjustable undershelf, s/s frame & shelf, 16 gauge, type 430 stainless steel top	4,454.01	4,454.01
17	1	EXHAUST HOOD Delfield Model No. CCSP50168-24 Exhaust Hood, wall type, 14 feet long, 4'2"deep, 2'0" high, single plenum compensating, 18 ga. s/s construction insulated m/u air chamber, air volume control and fire damper in make-up air collar, with s/s baffle style grease filters, fan and light switch mounted to the front face and (3) pre-wired 100 watt incandescent lights and globes, 3" stand off, overall depth is 53"	2,750.00	2,750.00
	1	FSI ANSUL WET CHEMICAL FIRE SUPPRESSION SYSTEM, INSTALLED Hood to be hung by Food Equipment Dealer. Everything above the hood, Fans, curbs, duct work and installation of such to be by HVAC contractor. All permits and inspections to be the responsibility of and coordinated by HVAC Contractor. Electrical connections to be by Electrical Contractor. Roof penetrations and resealing of such by others.	900.00	900.00
	1	STAINLESS STEEL CLOSURE PANELS ABOVE HOOD	855.86	855.86
18	1	FRYER, GAS Vulcan Hart Model No. TK35 Fryer, Gas, 90,000 BTU, 35-40 lb. fat capacity, millivolt thermostatic controls, mild steel fry tank, painted front, sides and 6" legs, twin baskets, 1/2" gas w/regulator		
	1	Natural gas		

MAY 25,1999

WATERVIEW GOLF CLUB

Item	Qty	Description	Sell Each
	1	stainless steel sides	161.77
	1	stainless steel tank/drain top in lieu of mild steel	249.24
	1	casters(4), adj. hgt, s/s	136.38
	1	1675 KIT-48" Gas Connector Kit, 3/4" inside diameter, 48" long, with coiled restraining device, full port gas valve and 90 degree street elbow	105.67
			2,939.07
19	1	RANGE, 60" RESTAURANT, GAS Vulcan Hart Model No. 60FL Range, 60" Restaurant, Gas, 6-26,000 BTU open Burners with cast iron top grates, 30,000 BTU 1/2" mild steel (24") Griddle, two 35,000 BTU standard ovens, S/S front, sides, single deck high shelf & 6" legs, 3/4" rear gas w/regulator	
	1	Natural gas	136.38
	1	casters- set of 4	105.67
	1	1675 KIT-48" Gas Connector Kit, 3/4" inside diameter, 48" long, with coiled restraining device, full port gas valve and 90 degree street elbow	
			255.95
20	1	EQUIPMENT STAND FOR COUNTERTOP COOKING EQUIPMENT Metal Masters Model No. T3036SGS Griddle Stand, open base with bottom shelf, 30" x 36", 24" high, stainless top, legs, and undershelf, 1-1/4" up-turn on back and both ends	23.47
	2	300698 Casters- 4" diameter with brake	21.96
	2	300699 Casters- 4" diameter with brake	
			1,860.10
21	1	CHAR BROILER Vulcan Hart Model No. VCCB36 CHAR BROILER, GAS, COUNTER, 87 MBTU/HR, 36"Wx27"D, (6) CAST IRON REVERSIBLE BROILING GRATES & RADIANTS, S/S FRONT AND SIDES, INDIVIDUAL DIRECT ACTION GAS VALVE FOR EACH BURNER, 3/4" REAR GAS REGULATOR	105.55
	1	back splash	105.67
	1	1675 KIT-48" Gas Connector Kit, 3/4" inside diameter, 48" long, with coiled restraining device, full port gas valve and 90 degree street elbow	
			2,845.95
22	1	CONVECTION OVEN, GAS Vulcan Hart Model No. GCO4D Oven, Convection, Gas, 40,000 BTU, single-deck, standard depth, solid state controls, 1/3 HP two speed fan, spark ignition, stainless steel front w/glass doors, painted sides, top, back and 25" legs, 3/4" gas w/regulator	
	1	Natural gas	167.41
	1	Stainless steel sides and top	189.05
	1	Casters	105.67
	1	1675 KIT-48" Gas Connector Kit, 3/4" inside diameter, 48" long, with coiled restraining device, full port gas valve and 90 degree street elbow	
			2,971.65
23	1	ICE MAKER, CUBE-STYLE Manitowoc Model No. QY-1094N Ice Maker, Cube-Style, air-cooled, remote condenser, approximately 850-lb production/24 hrs, stainless steel finish, half-dice size cubes	49.50
	1	208-230V/60/3ph	252.29
	1	TRI-L-25N Two primary filter plus pre-filter assembly, for Series 800, 1000, 1300 and 1800	914.10
	1	S-970 Ice Bin, w/top-hinged front-opening door, approx. 760 lb ice storage capacity, for top-mounted ice maker, stainless steel exterior	104.94
	1	K-00140 Bin adapter, 30" Q ice machine to 48" S-970 bin	550.11
	1	JC-1095 Condenser Unit, Remote Air-Cooled, Q-1000 Series	

'25,1999

WATERVIEW GOLF CLUB

Item	Qty	Description	Sell Each	Sell Total
	1	RT-50-R-404A Remote Tubing Kit, 50 ft. tubing length, for J-450, J-600, J-800 and J-1000 Series	168.80	168.80
			492.97	492.97
24	1	WORK TABLE Metal Masters Model No. T3066STE-BS Work Table, stainless steel top, 30" wide top, with splash at rear only, 72" long, with s/s legs, side & rear s/s crossrails, 14 gauge, type 304 stainless steel top		
		special length 5'6"	73.68	73.68
	1	B-0231 Sink mixing faucet with 12" swing nozzle, wall mounted, 8" centers on sink faucet with 1/2" IPS eccentric flanged female inlets, lever handles	185.53	185.53
	1	marine edge	387.33	387.33
	1	sink, 18"x20"x14" deep bowl with deck mount faucet and basket drain		
			133.28	133.28
25	1	SHELF, WALL-MOUNTED Metal Masters Model No. WS1272-16/4 Shelf, Wall-Mounted, 16 gauge 430 stainless steel, 12" wide, 6 feet long		
			2,064.15	2,064.15
26	1	FOOD SLICER Hobart Model No. 1612P Slicer, Food, (Valve Line) angle feed, manual, 1/3-HP, 12" dia. Stay Sharp knife, non-removable knife ring guard, removable sharpener, s/s knife, knife cover, gauge plate & carraige, cast aluminum base		
			598.22	598.22
27	1	WORK TABLE Metal Masters Model No. T3096STE-BS Work Table, stainless steel top, 30" wide top, with splash at rear only, 96" long, with s/s legs, side & rear s/s crossrails, 14 gauge, type 304 stainless steel top	387.33	387.33
	1	sink, 18"x20"x14" deep bowl with deck mount faucet and basket drain	82.92	82.92
	1	end splash, left end	73.68	73.68
	1	B-0231 Sink mixing faucet with 12" swing nozzle, wall mounted, 8" centers on sink faucet with 1/2" IPS eccentric flanged female inlets, lever handles	185.53	185.53
	1	marine edge		
			165.46	165.46
28	1	SHELF, WALL-MOUNTED Metal Masters Model No. WS1296-16/4 Shelf, Wall-Mounted, 16 gauge 430 stainless steel, 12" wide, 8 feet long		
57	1	SHELVING Metro SHELVING, ONE LOT CONSISTING OF THE FOLLOWING:	30.25	453.75
	15	1848BR Shelving, Wire, 18" wide, 48" long, zinc-coated finish	10.18	122.16
	12	74P Post, Chrome finish, 74 5/8" high		
			265.41	265.41
30	1	POT RACK, WALL-MOUNTED Metal Masters Model No. WM84PR Pot Rack, Wall-Mounted, double bar design, 84"-long, with stainless steel single hooks, constructed of 3/16" x 2" stainless steel		
			1,338.43	1,338.43
31	1	SINK, THREE COMPARTMENT Metal Masters Model No. FN2060-3-18 Sink, Three Compartment, stainless steel, with left and right drain boards, 20" front-to-back x 20" w. compartment, 14" deep, with 8" high splash, s/s open frame base, boxed crossrails, 14/304 stainless steel	76.54	76.54
	1	B-0230 Sink mixing faucet with 18" swing nozzle, wall mounted, 8" centers on sink faucet with 1/2" IPS eccentric flanged female inlets, lever handles		
			739.07	739.07
32	1	DISHTABLE, SOILED Metal Masters Model No. SDTL-60-14/3 Dishtable, Soiled, straight design, left-to-right, 8" backsplash, s/s crossbraced legs & gussets and metal feet, 60" long, 14/304 stainless steel		

{ 25,1999

WATERVIEW GOLF CLUB

Item	Qty	Description	Sell Each	Sell Total
	1	K-452 Control bracket, price per each	57.96	57.96
	1	B-0113 Pre-Rinse Unit, spring action gooseneck, 4" center deck faucet, under sink 1/4" IPS tailpieces, approx. 48" high, 9" clearance, 15" overhang, B-0107 spray valve, B-0044-H flexible stainless steel hose	161.58	161.58
33	1	Metal Masters Model No. 605381 21" x 42" slanted rack shelves	253.44	253.44
34	1	DISPOSER In-Sink-Erator Model No. SS-200-5-MRS Disposer, with adapter for 3.5" to 4" sink opening, with long upper housing, 2-HP motor, stainless steel construction, manual reverse switch	1,397.00	1,397.00
	1	208v, 3 ph	5,738.04	5,738.04
36	1	DISHWASHER, DOOR TYPE Hobart Model No. AM14-26 Dishwasher, Door Type, convertible high/low temperature sanitizing, straight-thru design, all stainless steel finish, 200-230/60/3, electric heat, less racks	382.80	382.80
36	1	HOOD Larkin Model No. CH1 Type 2 condensate hood, wall mount, 430 stainless steel, (1) 7X7 exhaust collar mounted, Hood to be hung by Food Equipment Dealer. Fans, curbs, duct work and installation of such to be by HVAC contractor. All permits and inspections to be the responsibility of and coordinated by HVAC Contractor. Electrical connections to be by Electrical Contractor. Roof penetrations and resealing of such by others.	819.50	819.50
37	1	BOOSTER HEATER, ELECTRIC Halco Model No. C-9 Compact Booster Heater, Electric, 6-gallon storage capacity, electric operation, 9-KW, stainless steel front, custom fittings & Castone tank	55.00	55.00
	1	208V, 3-phase	251.83	251.83
	1	SSA-LEGS 6" - 8" Stainless steel adjustable legs		
38	1	DISHTABLE, CLEAN Metal Masters Model No. CDTR-48-16/3 Dishtable, Clean, straight design, left-to-right, 8" backsplash, galvanized steel open frame pipe base, with side crossrails, 48" long, 16/304 stainless steel		
57	1	SHELVING Metro SHELVING, ONE LOT CONSISTING OF THE FOLLOWING:	28.60	228.80
	8	1448NC Shelving, Wire, 14" wide, 48" long, chrome-plated finish	9.35	74.80
	8	63P Post, Chrome finish, 62 9/16" high		
40		mop sink, by others	12,089.00	12,089.00
41	1	WALK-IN REFRIGERATION Kolpak Model No. CUSTOM 8'8 1/2"x 13'6"x 8'6 1/4"H walk-in cooler/freezer; a partition wall divides the box into a 9'x9' nominal dim. cooler and a 9'x5' nominal dim. freezer, both compartments to have a smooth aluminum floor, #26 galvalume finish walls interior and exterior, both doors to have brushed chrome hardware, camlift hinges dial thermometers, door closers and diamond tread kick plates both inside and out; the freezer door to have a heater wire, the cooler to have one vapor proof light at the door and two others positioned as per the electrical plan, the freezer to have one vapor proof light at the door and one other positioned as shown on the electrical plan, booth cooler and freezer light should be controled by switches w/pilot lights located in the door panels, membrane roof cap to be installed and the box trimmed out with galvalume 3"x3" trim strips		

WATERVIEW GOLF CLUB

Y 25,1999

Item	Qty	Description	Sell Each	Sell Total
		Walk-in box to be erected and refrigeration installed by the food equipment dealer, the FED will be responsible for permits and inspections, electrical and plumbing to be by appropriate contractor, start-up to be by the FED		
57	1	SHELVING Metro SHELVING, ONE LOT CONSISTING OF THE FOLLOWING:	237.60	475.20
	2	N556K2 Shelving Unit, 4 wire shelves and 4 posts, 63" high, 24" wide, 48" long, Metroseal II (dark green epoxy) finish	201.30	201.30
	1	N536K2 Shelving Unit, 4 wire shelves and 4 posts, 63" high, 24" wide, 36" long, Metroseal II (dark green epoxy) finish	75.35	150.70
	2	2008 Dunnage Rack, Square Bar, one tier 24" wide, 36" long, 12" high, all aluminum finish, weight capacity 2500#		
57	1	SHELVING Metro SHELVING, ONE LOT CONSISTING OF THE FOLLOWING:	237.60	712.80
	3	N556K2 Shelving Unit, 4 wire shelves and 4 posts, 63" high, 24" wide, 48" long, Metroseal II (dark green epoxy) finish	215.33	215.33
44	1	LIQUOR DISPLAY UNIT Krowne Metal Model No. KR-LD-1 Royal Liquor Display Unit, raised stand, 18"-long x 22" front-to-back, with 3" deep steps, s/s top, front, sides & legs	188.76	188.76
45	1	DRAINBOARD Krowne Metal Model No. KR-GS-2312 Royal Drainboard, free standing design, 12" long, 23" deep front to back, s/s top, front, sides and legs, 7" high backsplash	941.16	941.16
46	1	ICE BIN/COCKTAIL STATION Krowne Metal Model No. KR-18-24DP-CP8 Royal Ice Bin, with 8 circuit cold plate, 146-lb ice storage capacity, 15" deep with 7" backsplash, S/S top, front sides and legs, 24" L x 18" W, 1/2" drain	46.04	46.04
	1	RS-24 Royal Speed Rail, single, stainless steel, 24"	493.52	493.52
47	1	HAND SINK Krowne Metal Model No. KR-HS23 Royal Hand Sink, modular workboard unit, 18" wide x 23 1/4", 7" backsplash, s/s, top, front, sides and legs, 4" HD center splash mount faucet, 1" drain	709.83	709.83
48	1	WORKBOARD SINK UNIT, MODULAR DESIGN Krowne Metal Model No. KR-23-43R Royal Underbar Work Board Sink Unit, w/three sink compartments, 48"-long, w/12" left-handed drainboard, 23" deep, 7" high backsplash, s/s top, front, sides & legs, sink bowls - 10" x 14" x 9 3/4" deep, 4" HD center deck mount faucet, 1" drains	1,785.47	1,785.47
49	1	BOTTLE COOLER Perlick Model No. 7260ESSEBL Bottle Cooler, flat top, self-contained refrigeration system, deep well design, 2-sliding doors, 48"-long, stainless interior and exterior	2,618.39	2,618.39
50	1	BACKBAR STORAGE CABINET, REFRIGERATED Perlick Model No. C5064ESCHPA Backbar Storage Cabinet, Refrigerated, 3-section, 37" high, condensing unit on right, enamel cabinet, unfinished top, with plastic laminate doors, plastic coated shelves	201.47	201.47
	1	GLASS DOOR IN LIEU OF STANDARD DOOR - FACTORY LAMINATED TRIM HINGED LEFT	201.47	402.94
	2	GLASS DOOR IN LIEU OF STANDARD DOOR - FACTORY LAMINATED TRIM HINGED RIGHT	38.50	38.50
	1	Five year compressor warranty		

MAY 25,1999

WATERVIEW GOLF CLUB

Item	Qty	Description	Sell Each
51	1	SHELF Custom PASS THRU SERVICE SHELF ONLY, 18"X24", 304 STAINLESS STEEL, WINDOW CUT-OUT BY OTHERS, OPENING FINSHED BY OTHERS.	128.25
52	1	WORK TABLE, OPEN FRONT CABINET BASE Metal Masters Model No. OB3084SE-BS Work Table, Open Front Cabinet Base, stainless steel top, 30" wide top, with splash at rear only, 120"-long, stainless steel cabinet, mounted on 7" legs, 14 gauge, type 304 stainless steel top	1,559.82
	1	Urn trough,36"x4.5"	223.00
	1	cut out for drink dispenser/ice bin (unit by others) 23 1/4"x23 1/4"	66.26
	1	sink, 10"x14"x9 1/2" bowl	235.50
	1	Center shelf	271.85
53	1	SHELF, WALL-MOUNTED Metal Masters Model No. WS12120-16/4 Shelf, Wall-Mounted, 16 gauge 430 stainless steel, 12" wide, 10 feet long	202.55
54		soda dispenser, by others	
55		Tea brewer, by others	
56		Coffee brewer, by others	
57	1	SHELVING Metro SHELVING, ONE LOT CONSISTING OF THE FOLLOWING:	
	30	2148BR Shelving, Wire, 21" wide, 48" long, zinc-coated finish	37.44
	24	86P Post, Chrome finish, 86 5/8" high	13.99
58	5	SHELVING, WIRE Metro Model No. 2142BR Shelving for bag-n box, (unit by others), 21" wide, 42" long, zinc-coated finish	35.57
	4	74P Post, Chrome finish, 74 5/8" high	11.56
101	1	INSTALLATION GERNSBACHER'S INC Model No. INSTALL DELIVER, UNCRATE, SET-UP AND SET IN PLACE THE EQUIPMENT LISTED ABOVE, MAKE READY FOR FINAL CONNECTIONS, HANG THE VENT-A-HOOD, EVERYTHING ABOVE THE CEILING TO BE DONE BY HVAC CONTRACTOR, ELECTRICAL AND PLUMBING TO BE BY OTHERS, DUCT WORK TO BE BY OTHERS NOTE: ALL FINAL CONNECTIONS TO BE DONE BY OTHERS.	9,500.00
			Total
			Grand Total

EQUIPMENT LEGEND

NO.	DESCRIPTION	REMARKS
1.	LIQUOR STORAGE SHELVING	3
2.	PREP TABLE	
3.	OVERSHELF	
4.	PASS SHELF	
5.	HOT FOOD COUNTER	
6.	HEAT LAMP	5'-0"
7.	TOASTER	
8.	UTILITY COUNTER	
9.	TWO SECTION REFRIGERATOR	WITH BLOOMINGTON RAIL
10.	DOUBLE OVERSHELVES	18" WIDE
11.	UNDERCOUNTER FREEZER	
12.	MICROWAVE	
13.	REACH-IN REFRIGERATOR	
14.	SPARE NUMBER	
15.	HAND SINK	3
16.	WORK TABLE	
17.	EXHAUST HOOD	
18.	FRYER	
19.	RANGE/GRIDDLE	WITH OVENS
20.	CHAR-BROILER	
21.	EQUIPMENT STAND	
22.	CONVECTION OVEN	
23.	ICE MACHINE	
24.	PREP TABLE	WITH SINK
25.	OVERSHELF	
26.	SLICER	
27.	PREP TABLE	WITH SINK
28.	OVERSHELF	
29.	DISH SHELVING	3
30.	POT SINK	
31.	POT RACK	
32.	SOILED DISHTABLE	
33.	RACK SHELF	
34.	DISPOSER	
35.	DISHWASHER	
36.	CONDENSATE HOOD	
37.	BOOSTER HEATER	
38.	CLEAN DISHTABLE	
39.	DISH SHELVING	2
40.	MOP SINK	
41.	WALK-IN COOLER/FREEZER	
42.	WALK-IN COOLER SHELVING	5
43.	WALK-IN FREEZER SHELVING	3
44.	LIQUOR DISPLAY	
45.	DRAINBOARD	
46.	COCKTAIL STATION	
47.	HAND SINK	
48.	THREE COMPARTMENT SINK	
49.	BOTTLE BOX	
50.	BACK BAR REFRIGERATOR	
51.	PASS SHELF	
52.	BEVERAGE COUNTER	
53.	OVERSHELF	
54.	SODA DISPENSER	
55.	TEA BREWER	
56.	COFFEE BREWERS	2
57.	DRY STORAGE SHELVING	6
58.	BAG-IN-BOX SHELVING	
[illegible]	[illegible]	

Schedule "E"

BY DESIGN

4223 Glencoe Avenue, Marina Del Rey, CA. Suite C-110 90292 (310) 822 - 3434 FAX (310) 578-2148

Transmittal

To: STEVE RESNICK
AMERICAN GOLF

Date: 6-2-99
Via: FAX (310) 664-6169

Project: WATERVIEW LEASE EXIBIT

Project No.: 99-06D
Pages: 2 INCL. COVER

Contents	Comments:
F-1 LF-1 - LF-3 AND P-1 - P- ,, TO FOLLOW	FIXTURE PLAN, FOR YOUR APPROVAL, PLEASE NOTE THAT I HAVE MADE THE FITTING ROOM (LABELED "STORAGE" ON THE ORIGINAL ARCHITECT'S DRAWING) AND THE STARTER'S COUNTER CONFORM TO THE REQUIREMENTS OF THE AMERICANS WITH DISABILITIES ACT (A.D.A.) TO REDUCE THE LIABILITY FOR AMERICAN GOLF. I HAVE COPIED THE FIXTURE DRAWINGS & WILL DROP THEM OFF WITH A HARD COPY OF THE PLAN SHORTLY AFTER 1:00PM.

(MAPLE)

Distribution:

DENISE BRENNEMAN

From: JIM SNYDER

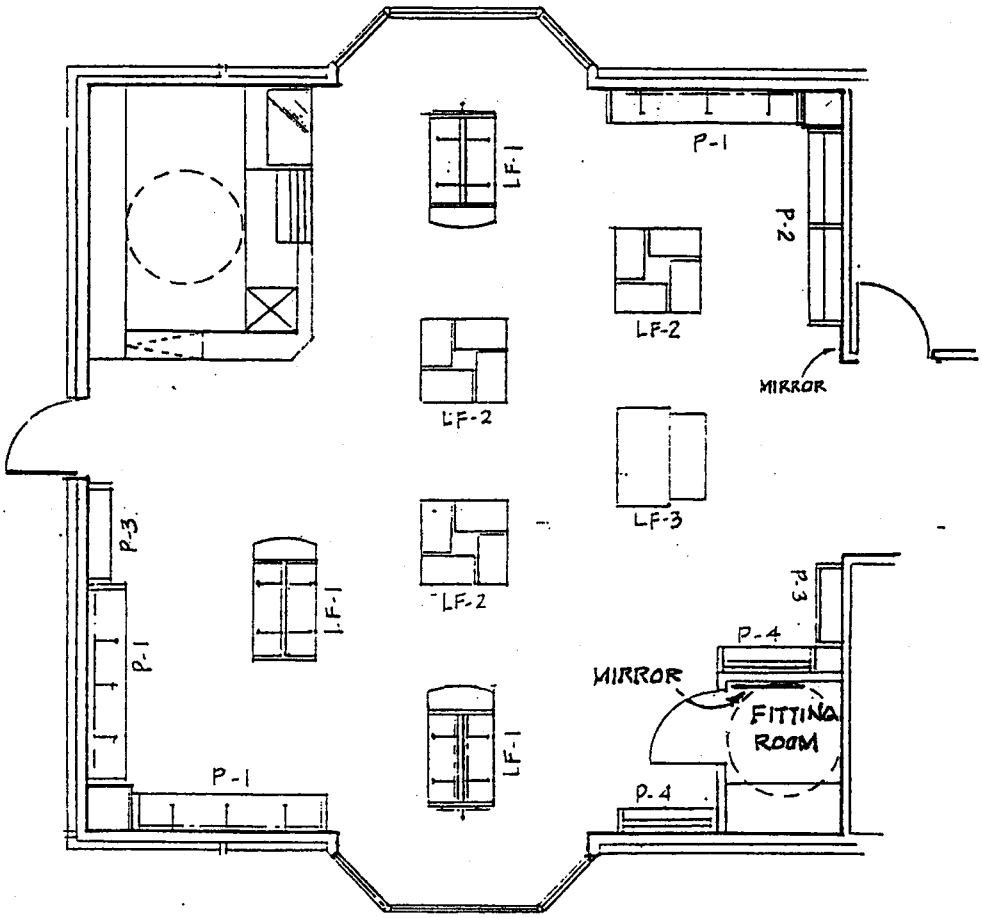

FIXTURE PLAN

1/8" = 1'-0"

E-1

BY DESIGN
4223 Glencoe Ave. Suite C-110
Marina Del Rey, CA 90292
(310) 822-3434
Fax: 578-2148

AMERICAN GOLF

Waterview Pro Shop Lease Exibit

SHEET No.

F-1

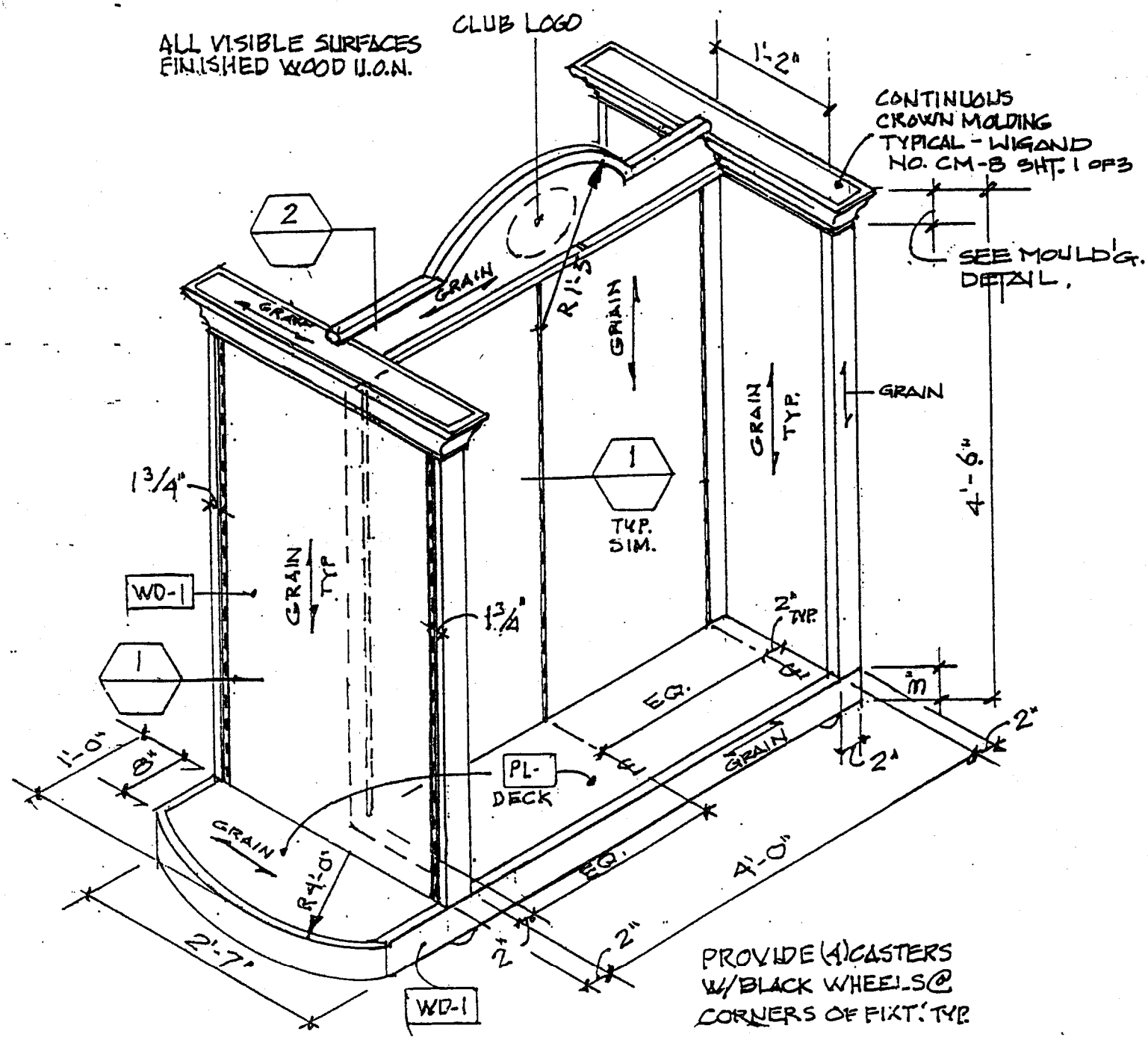

ENSEMBLE FIXTURE

3/4" = 1'-0"

E-2

BY DESIGN
4223 Glencoe Ave. Suite C-110
Marina Del Rey, CA 90292
(310) 822-3434
Fax 578-2148

AMERICAN GOLF

SHEET No. LF-1

1 OF 3

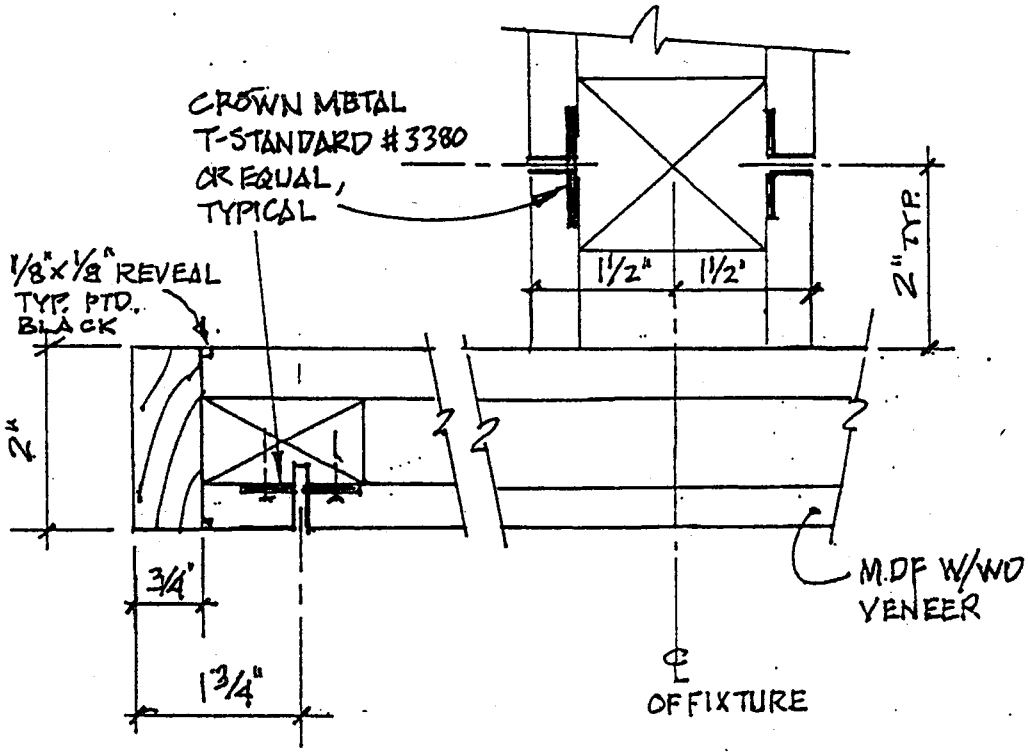

1 PLAN SECTION
1/2 FULL SIZE

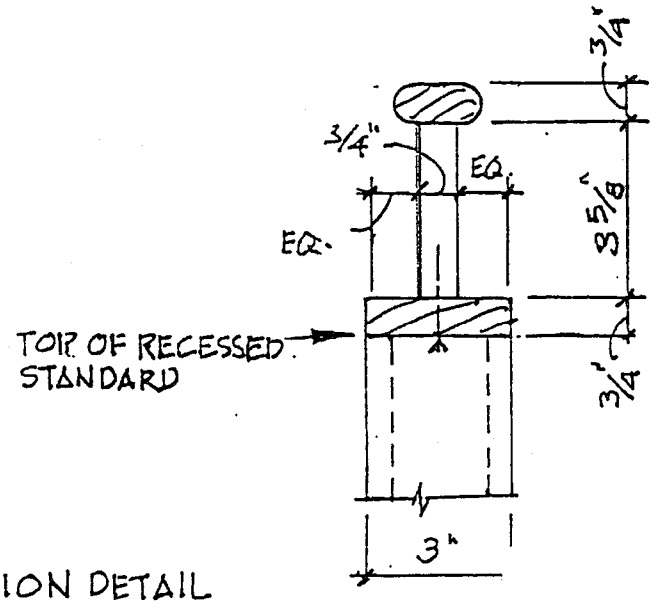

2 SECTION DETAIL
3"=1'-0"

BY DESIGN
4223 Glencoe Ave. Suite C-110
Marina Del Rey, CA 90292
(310) 822-3434
Fax 578-2148

AMERICAN GOLF

SHEET No.
LF-1
2 of 3

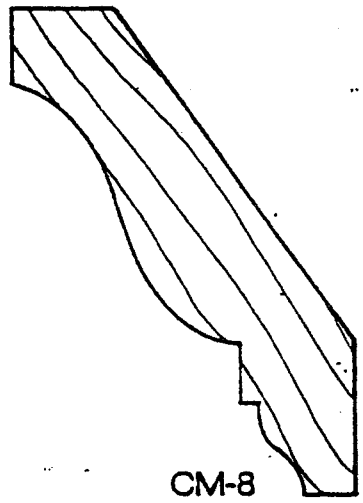

WIGAND CORPORATION 850 ELKTON DRIVE COLORADO SPRINGS, CO 80907-3586

BY DESIGN
4223 Glencoe Ave. Suite C-110
Marina Del Rey, CA 90292
(310) 822-3434
Fax 578-2148

AMERICAN GOLF

SHEET No
LF

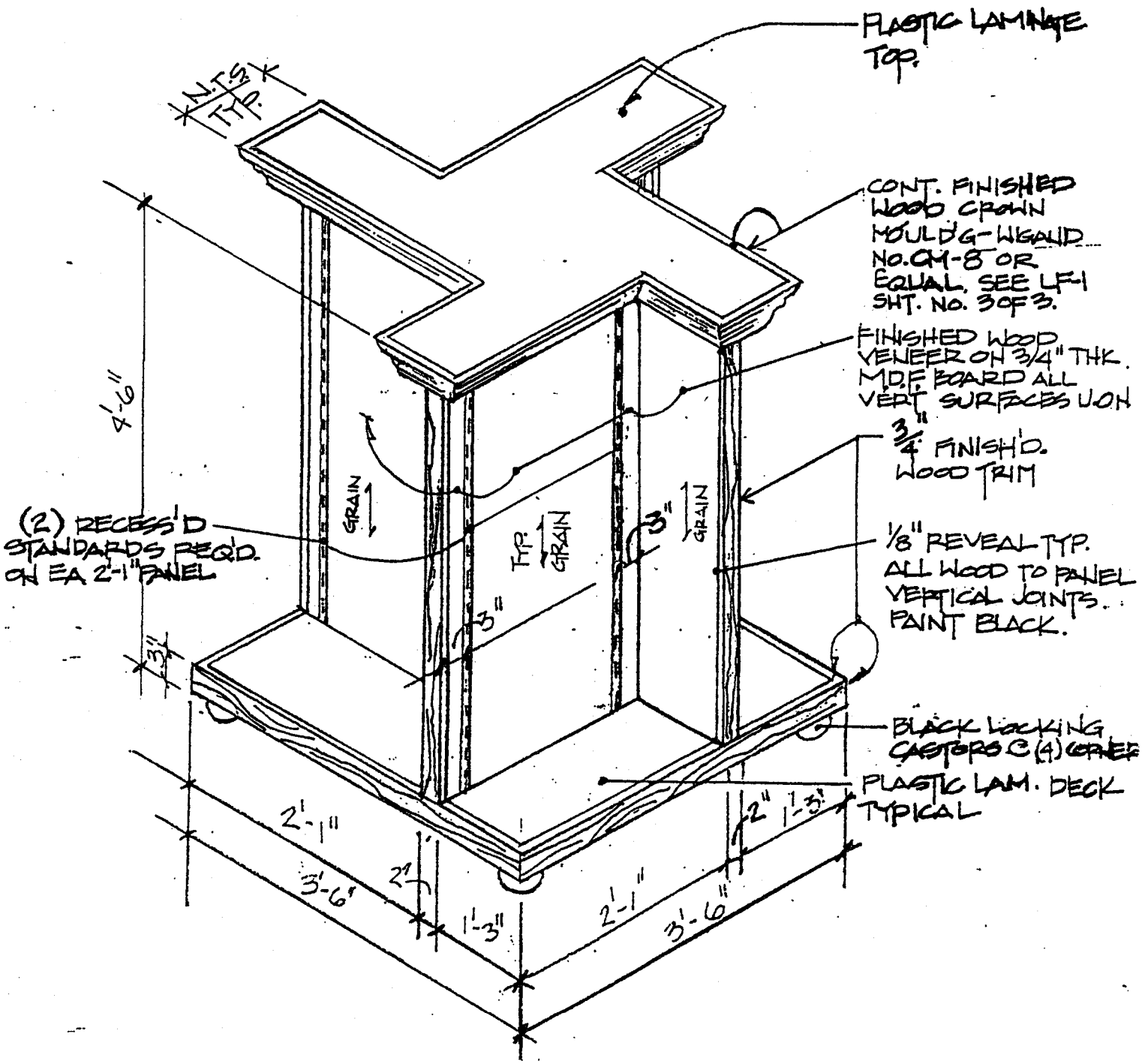

QUAD MERCHANDISER

3/4" = 1'-0"

BY DESIGN
4223 Glencoe Ave. Suite C-110
Marina Del Rey, CA 90292
(310) 822-3434
Fax 578-2148

AMERICAN GOLF

SHEET No. LF-2

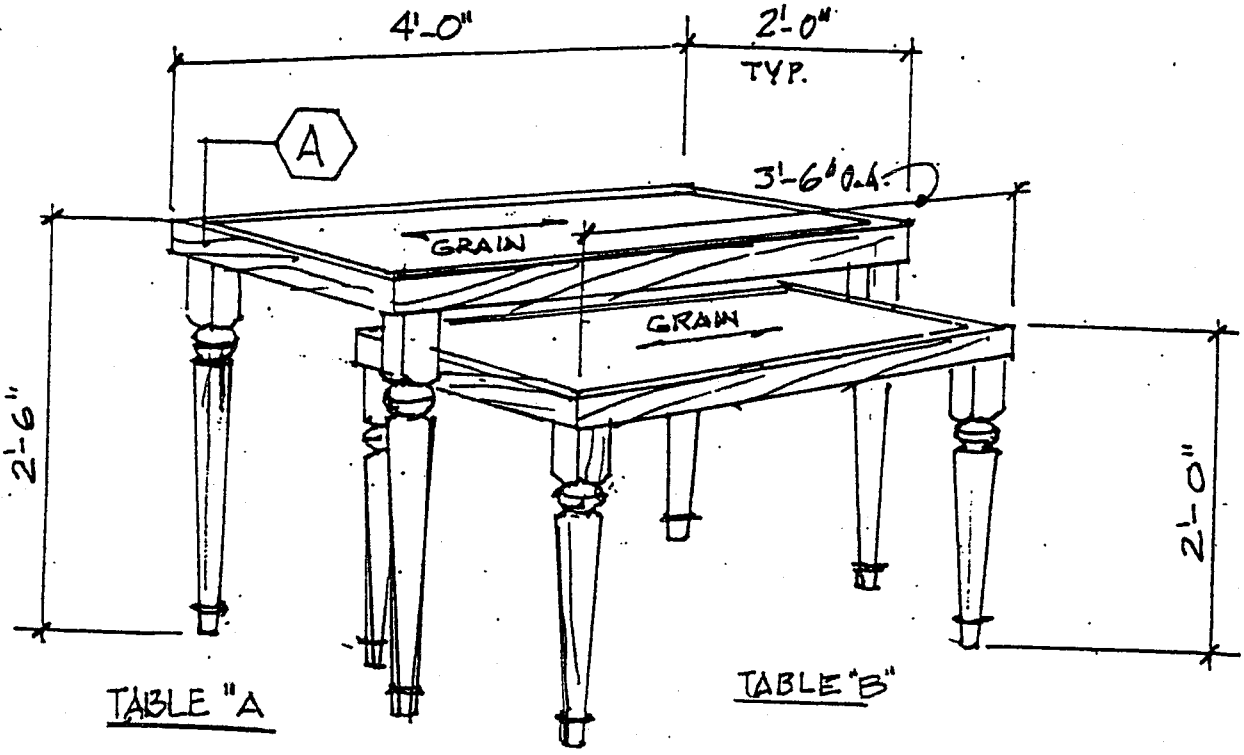

PERSPECTIVE
NO SCALE

ALL VISIBLE SURFACES TO BE FINISHED WOOD U.O.N.

PROVIDE HORIZ. BRACING ALONG CENTER OF TOP AS REQ'D.

ADAMS WOOD PRODUCTS
A0901 LEGS, TYP.
5436 JEFFREY LANE
MORRISTOWN, TN.
(423) 587-2942

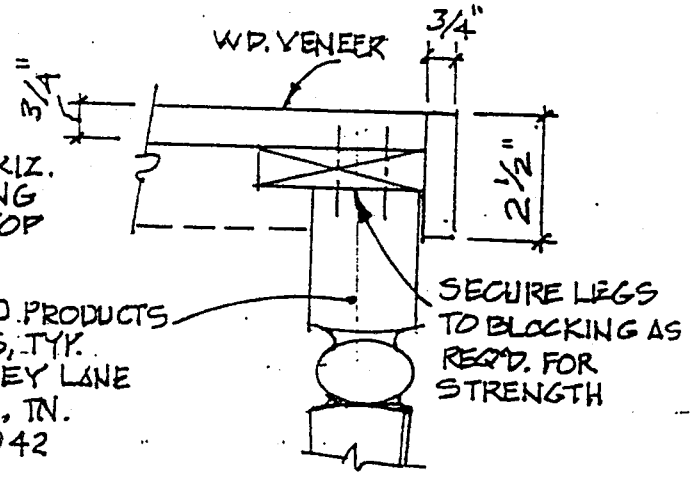

A DETAIL SECTION
3" = 1'-0"

BY DESIGN
4223 Glencoe Ave. Suite C-110
Marina Del Rey, CA 90292
(310) 822-3434
Fax 578-2148

AMERICAN GOLF

SHEET No. LF-3

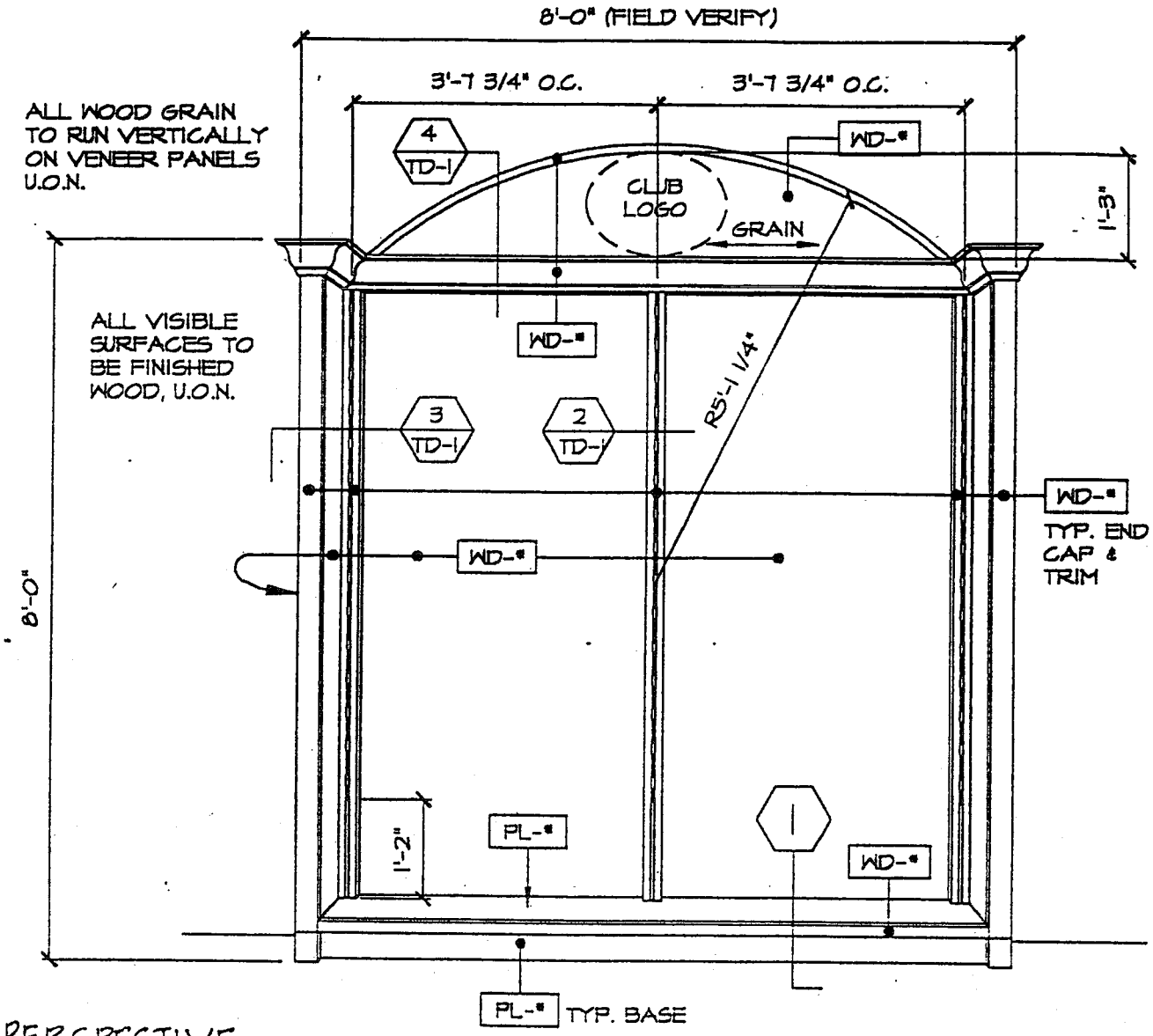

PERSPECTIVE

NO SCALE

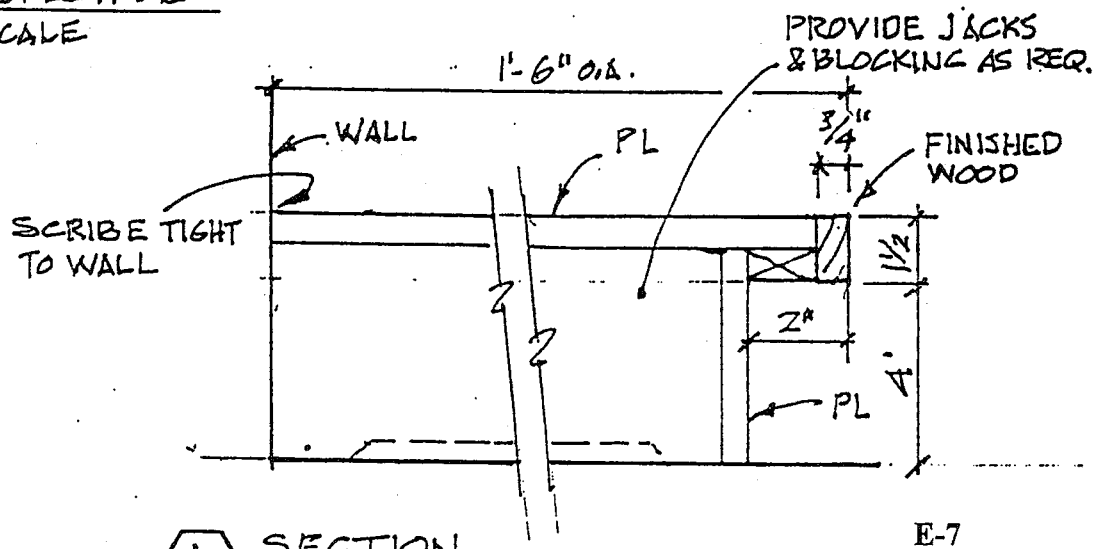

1 SECTION

3"=1'-0"

BY DESIGN
4223 Glencoe Ave. Suite C-110
Marina Del Rey, CA 90292
(310) 822-3434
Fax: 578-2148

AMERICAN GOLF

SHEET No.

P-1

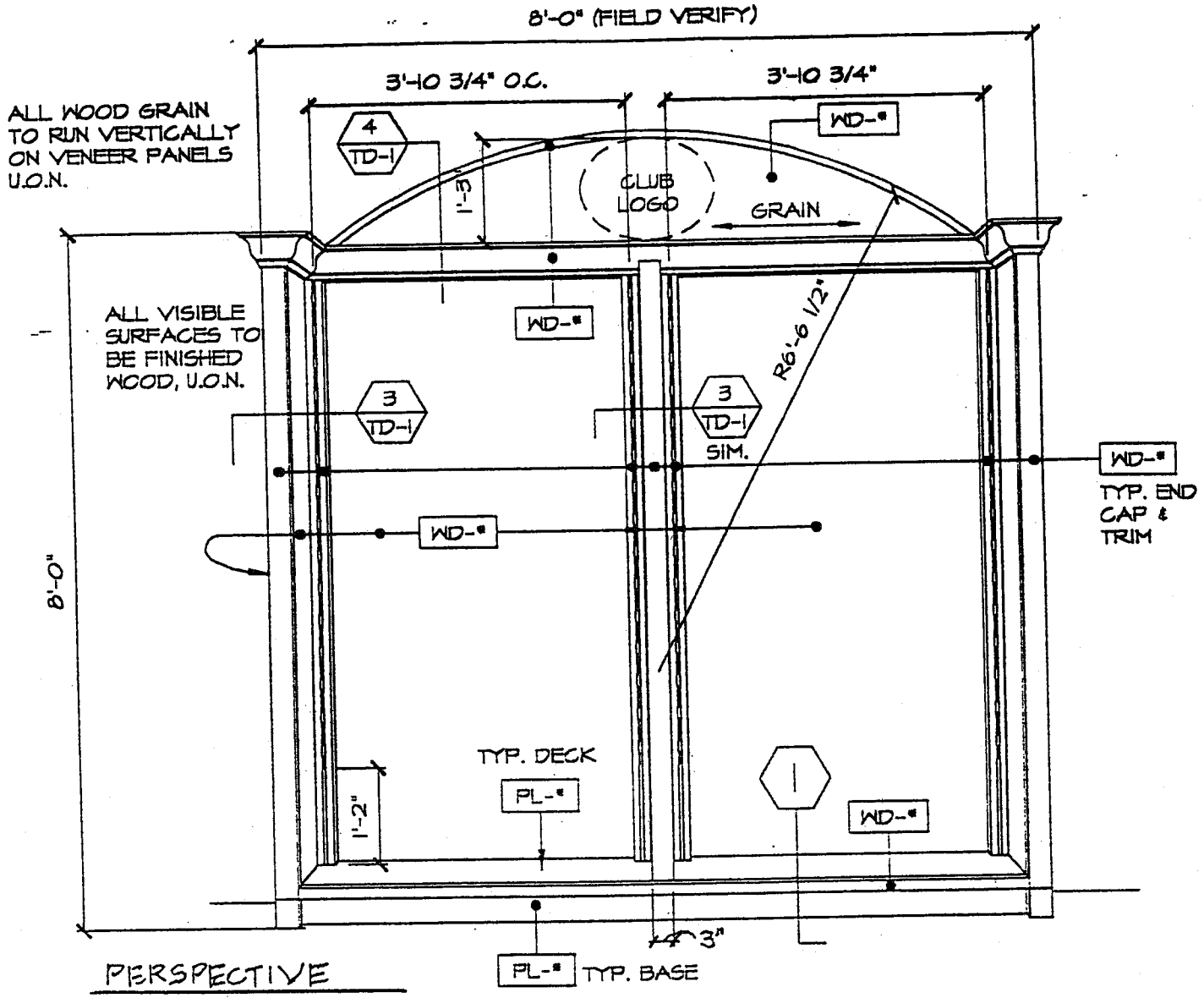

PERSPECTIVE
NO SCALE

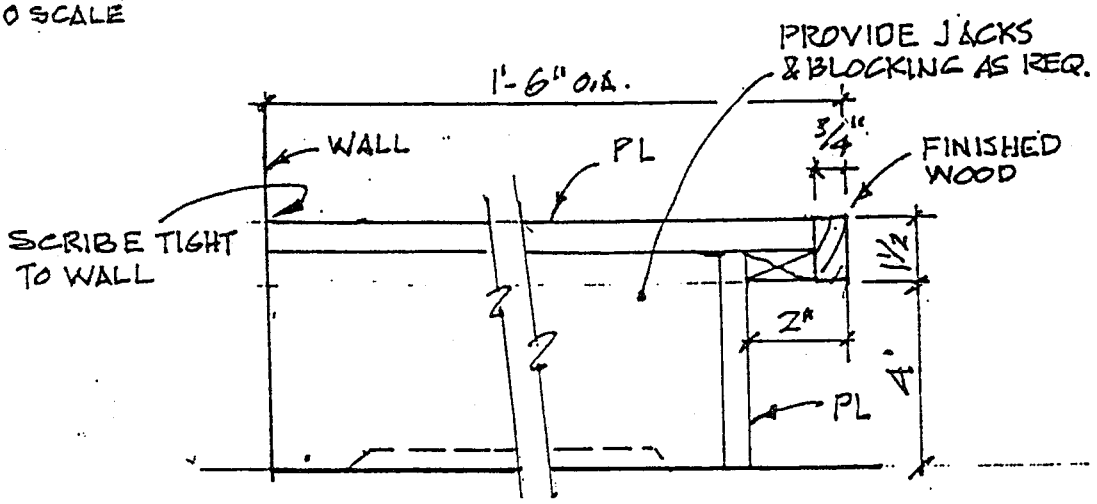

1 SECTION
3" = 1'-0"

BY DESIGN
4223 Glencoe Ave. Suite C-110
Marina Del Rey, CA 90292
(310) 822-3434
Fax 578-2148

AMERICAN GOLF

SHEET No.
P-2
1 OF 3

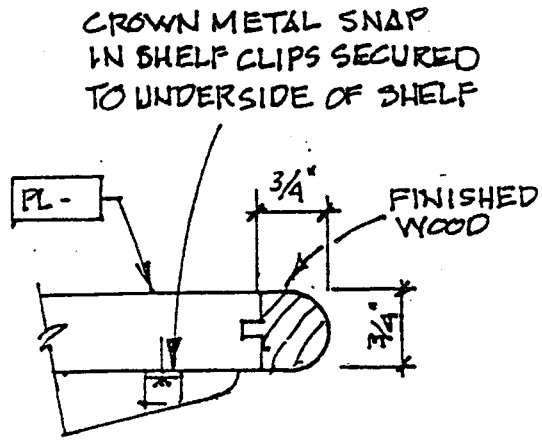

2 DETAIL / SECT.
1/2 FULL SIZE

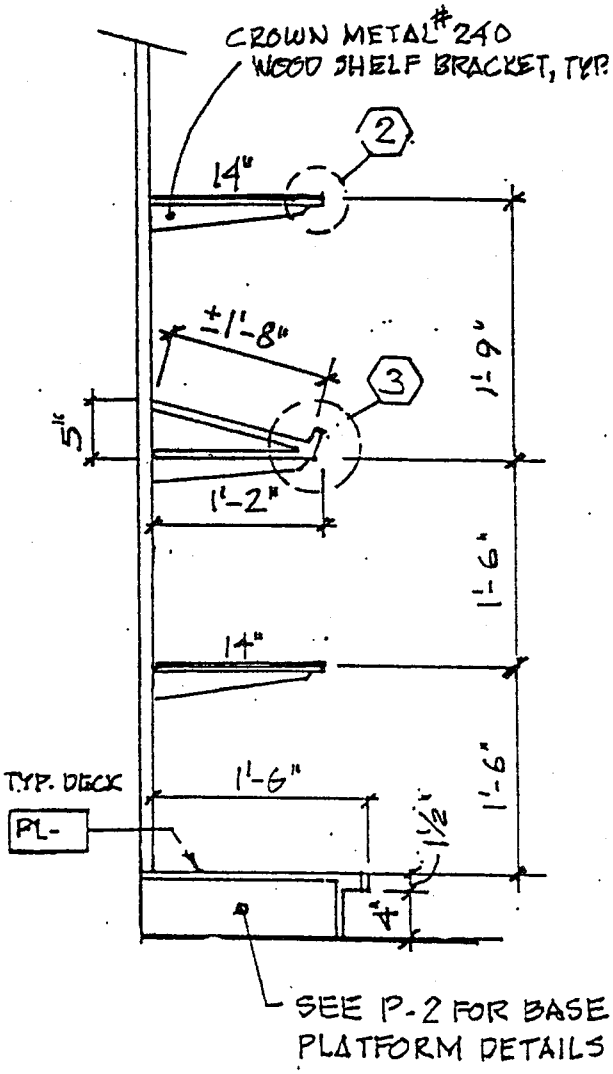

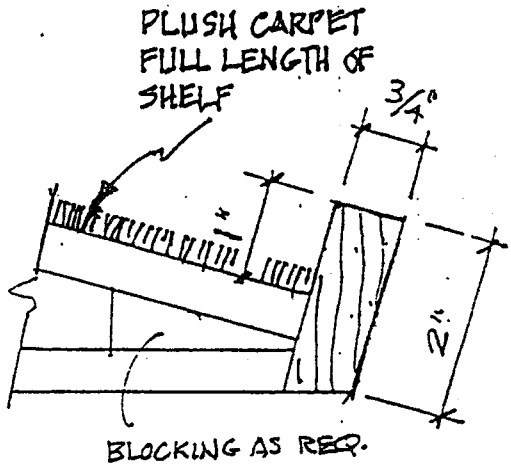

3 DETAIL
1/2 FULL SIZE

SHOES

BY DESIGN
4223 Glencoe Ave. Suite C-110
Marina Del Rey, CA 90292
(310) 822-3434
Fax: 578-2148

AMERICAN GOLF

SHEET No.
P-2
2 OF 3

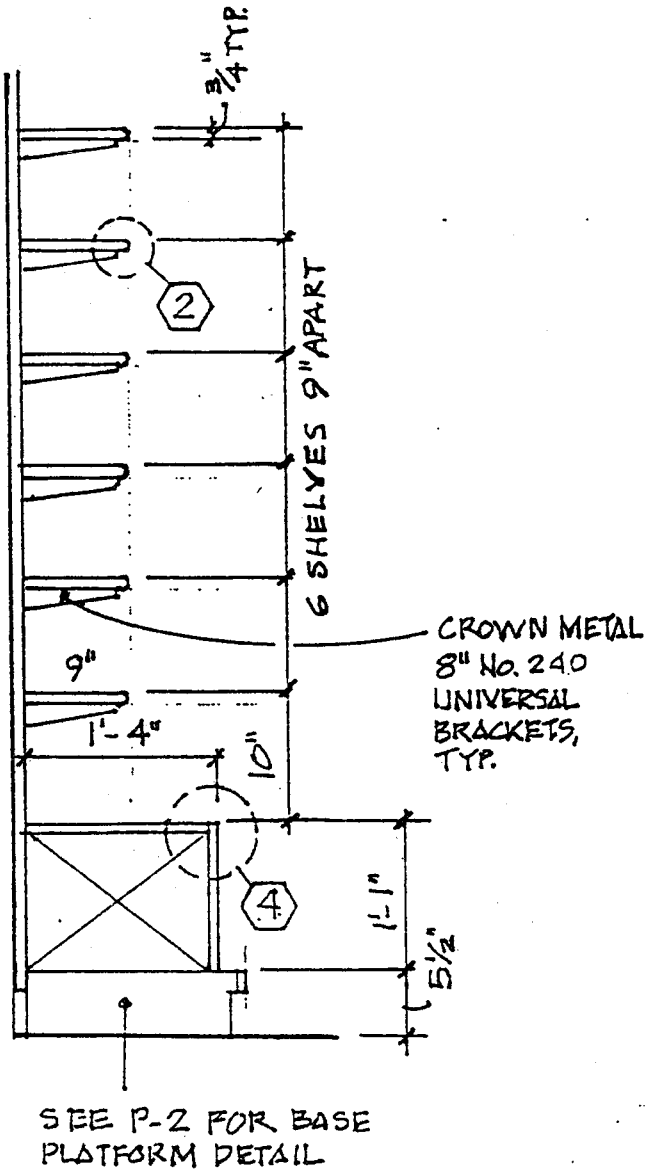

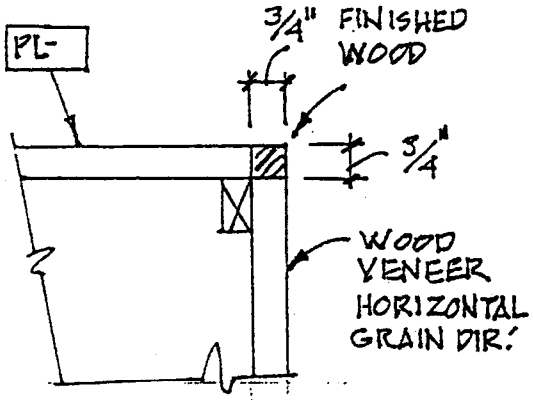

4 SECTION/DET.
3"=1'-0"

BY DESIGN
4223 Glencoe Ave. Suite C-110
Marina Del Rey, CA 90292
(310) 822-3434
Fax: 578-2148

AMERICAN GOLF

SHEET No.
P-2
3 OF 3

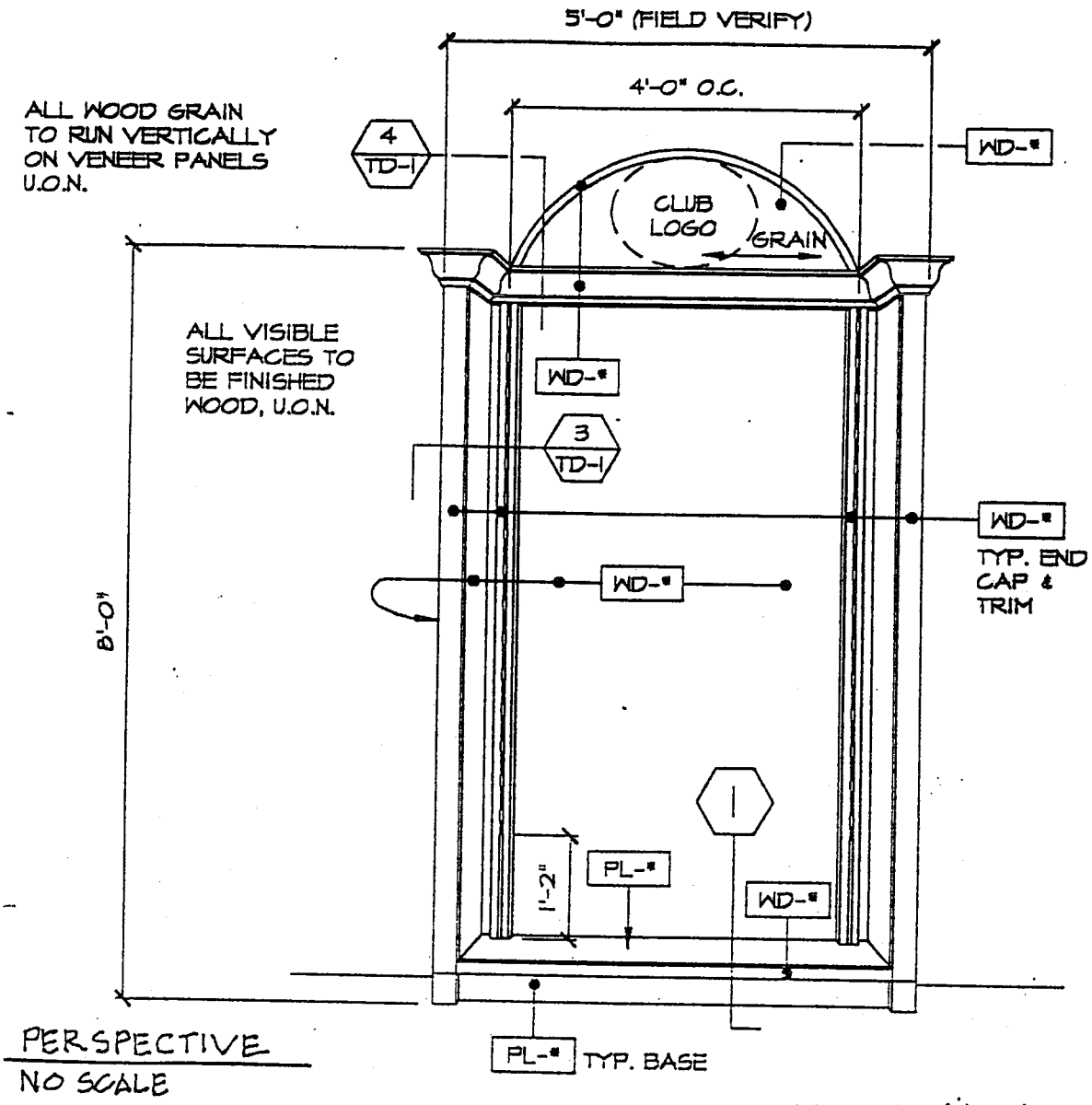

PERSPECTIVE
NO SCALE

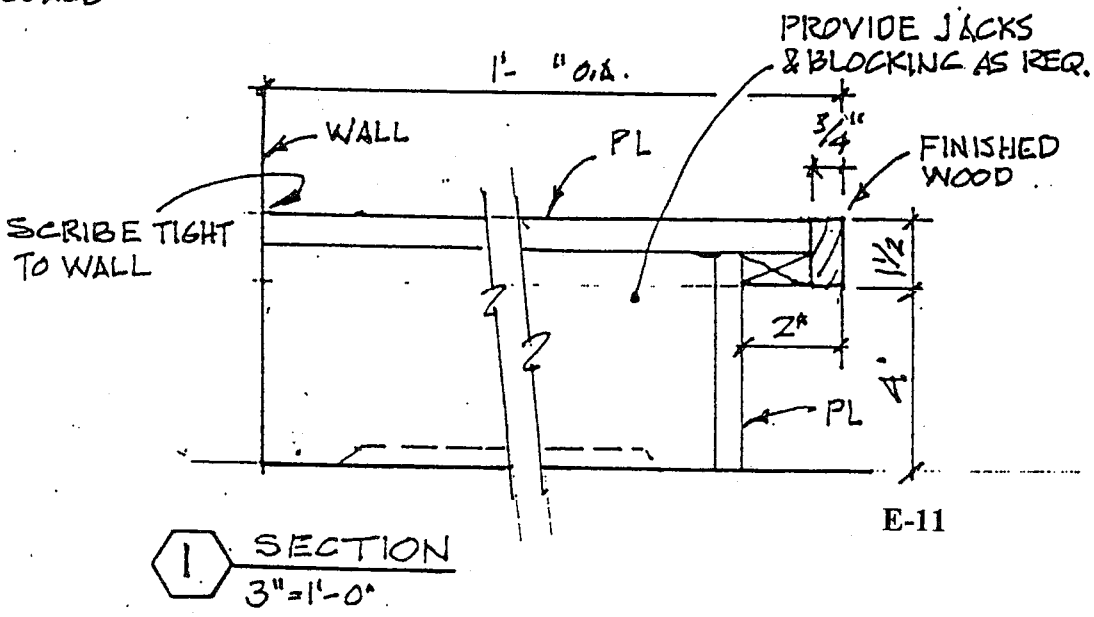

1 SECTION
3"=1'-0"

BY DESIGN
4223 Glencoe Ave. Suite C-110
Marina Del Rey, CA 90292
(310) 822-3434
Fax: 578-2148

AMERICAN GOLF

SHEET No.
P-3
1 OF 2

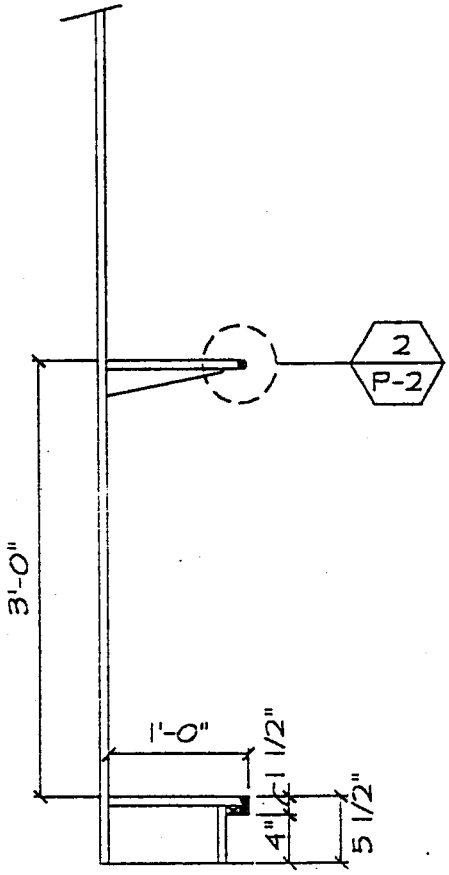

GOLF BAGS

3/4"=1'-0"

BY DESIGN
4223 Glencoe Ave. Suite C-110
Marina Del Rey, CA 90292
(310) 822-3434
Fax 578-2148

AMERICAN GOLF

SHEET No
P-3
2 of 2

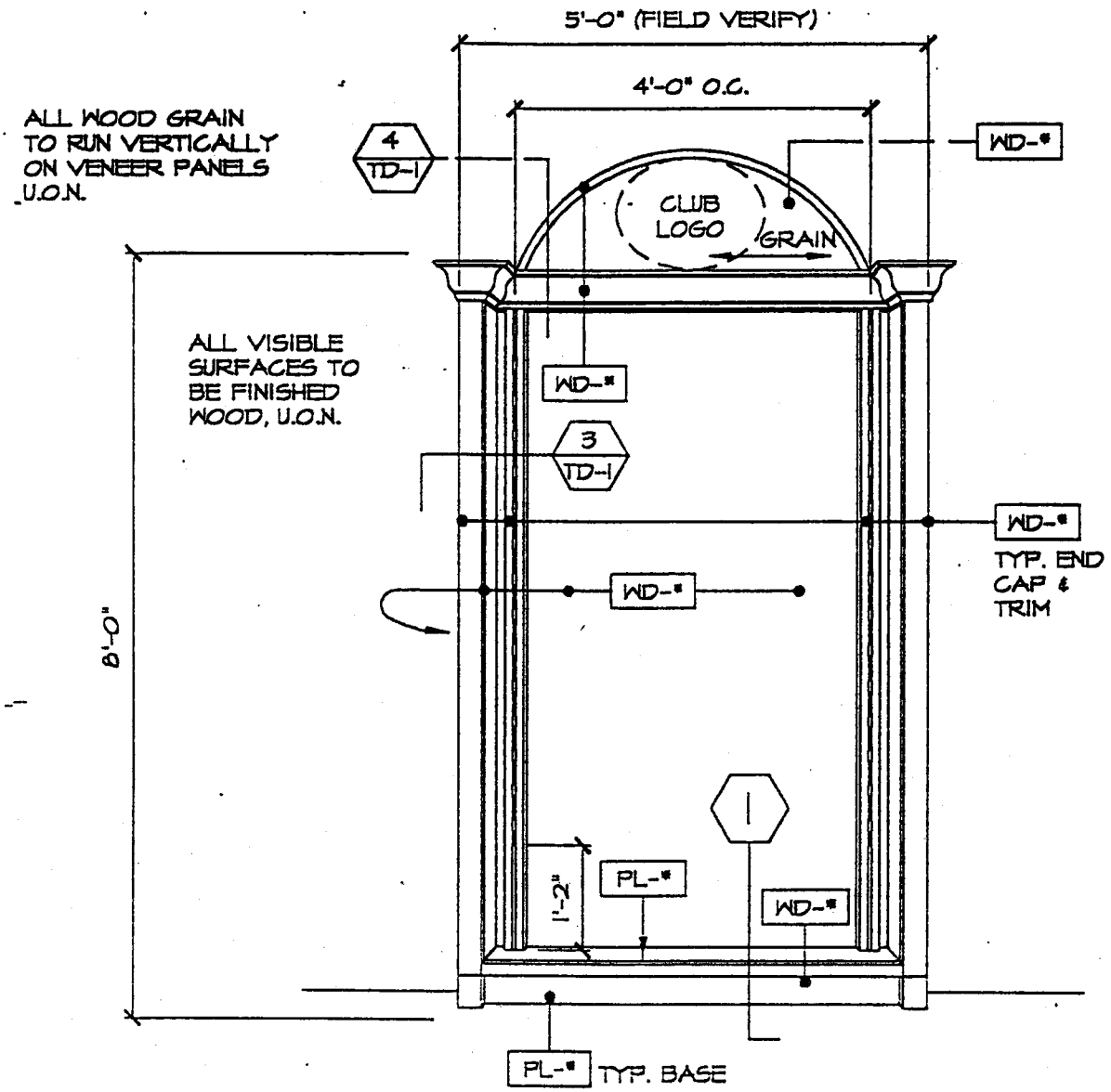

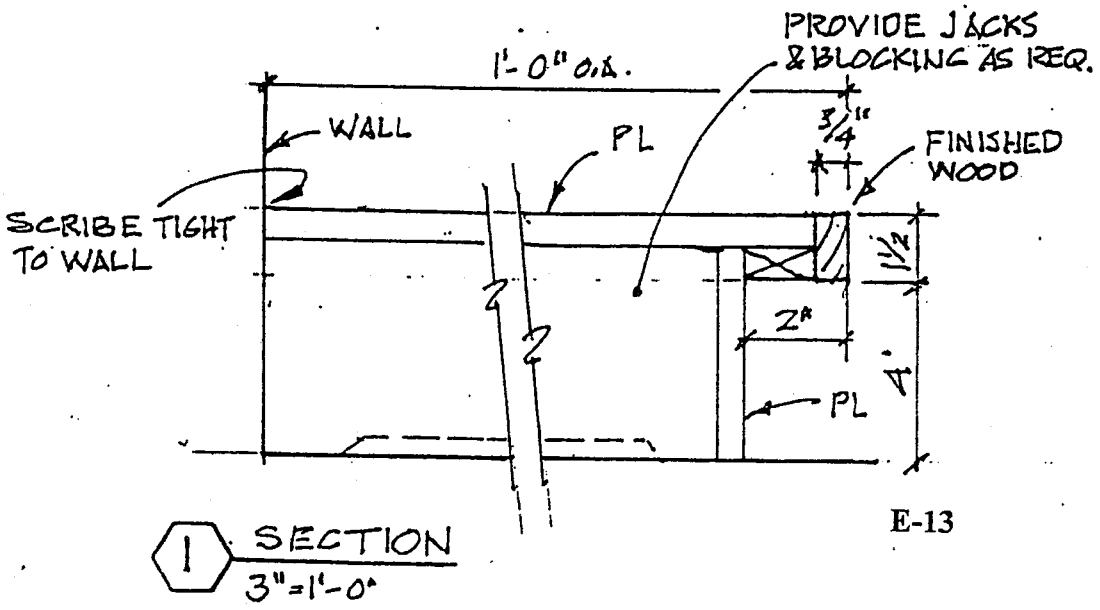

BY DESIGN
4223 Glencoe Ave. Suite C-110
Marina Del Rey, CA 90292
(310) 822-3434
Fax 578-2148

AMERICAN GOLF

SHEET No.
P-4
1 OF 3

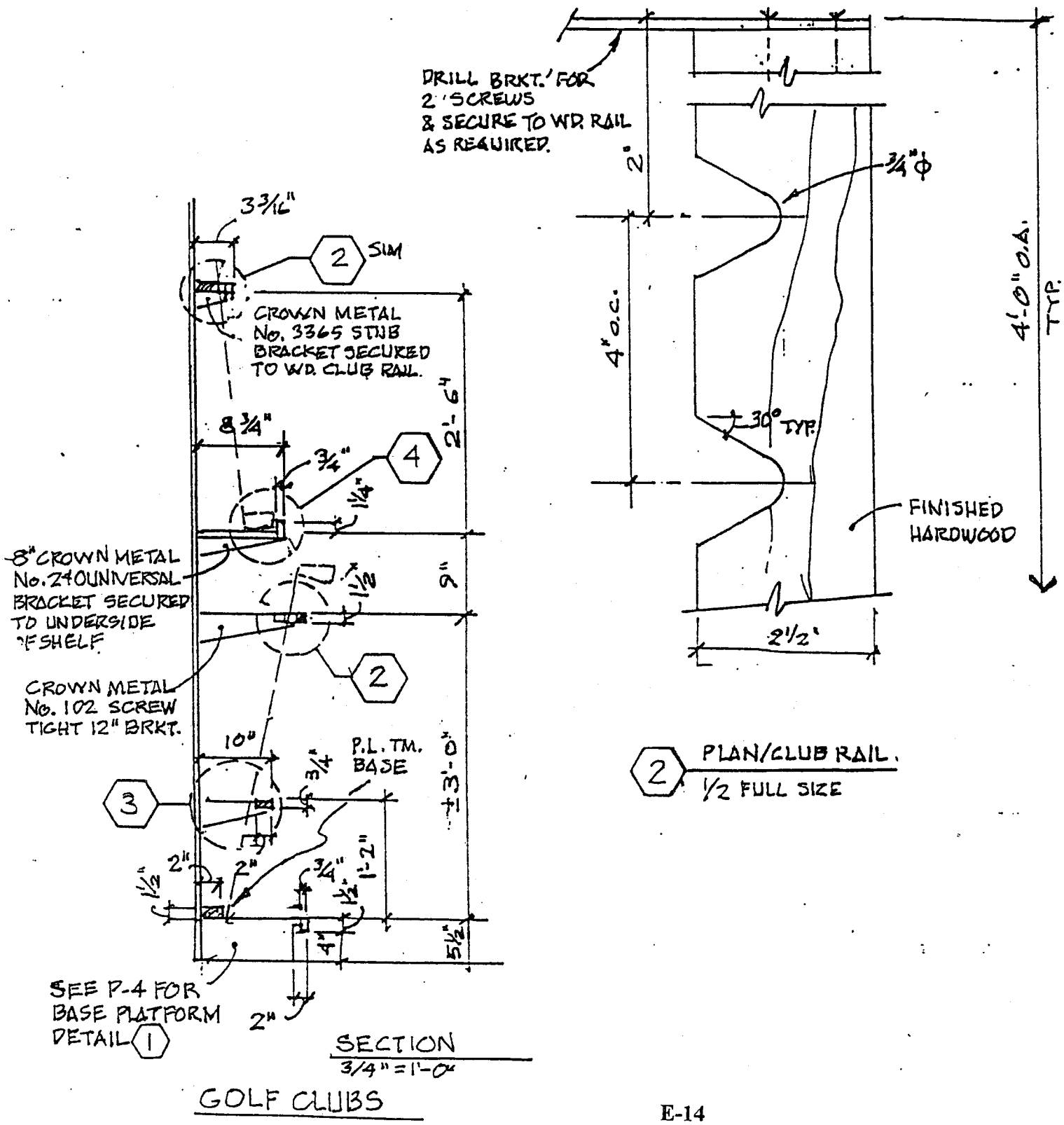

BY DESIGN
4223 Glencoe Ave. Suite C-110
Marina Del Rey, CA 90292
(310) 822-3434
Fax: 578-2148

AMERICAN GOLF

SHEET No. P-4
2 OF 3

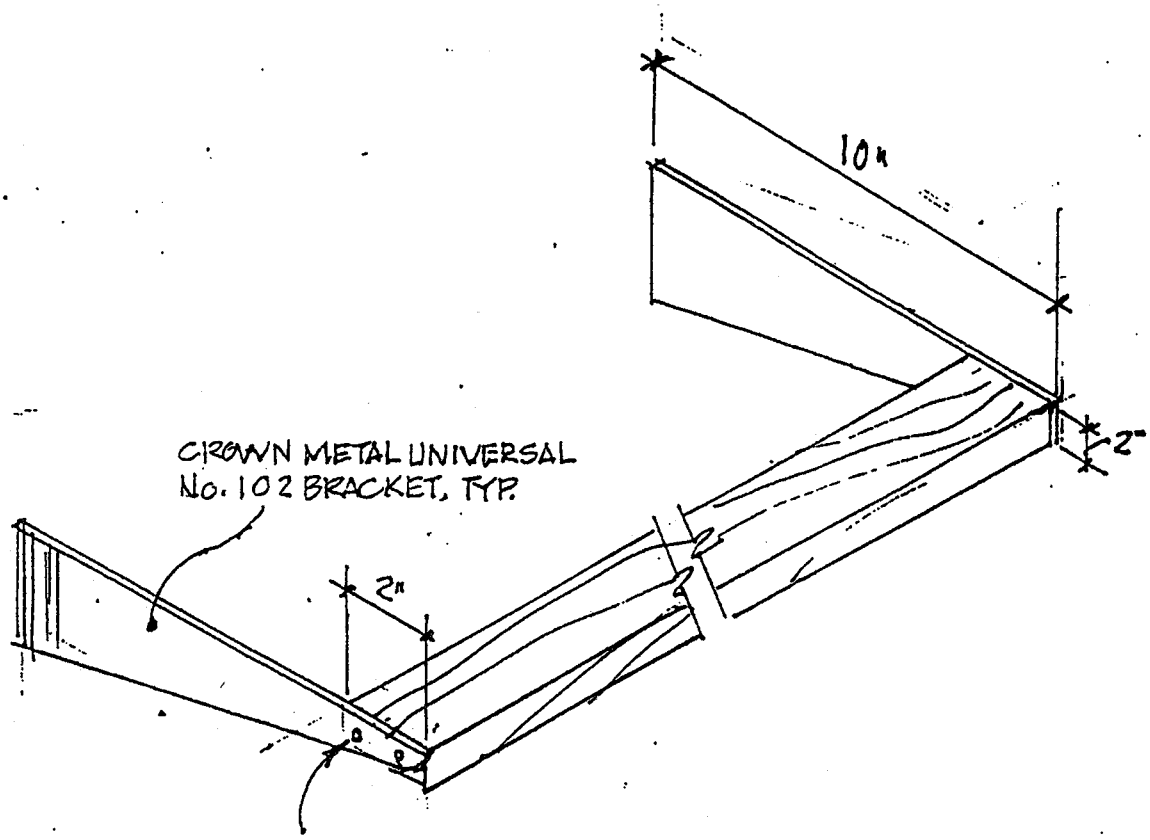

3 ISOMETRIC
3" = 1'-0"

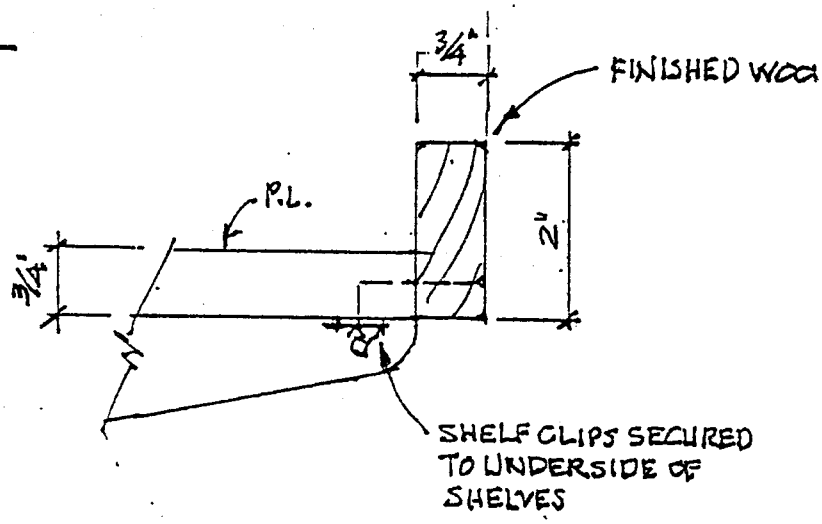

4 SECT.
1/2 SIZE

GOLF CLUBS

BY DESIGN
4223 Glencoe Ave. Suite C-110
Marina Del Rey, CA 90292
(310) 822-3434
Fax 578-2148

AMERICAN GOLF

SHEET No
P-4
3 OF 3

Waterview Golf Club House
Jun-99

Construction Costs - Phase I

Bid Package	Contractor Supplier	Original Budget	Adjustment Amount	Revised Budget	Explanation
BP01-B	Final Building Clean Rogers	$ 2,460.00		$ 2,460.00	
BP02-C	Concrete Paving Site Concrete, Inc.	$ 439,066.00		$ 439,066.00	
BP02-D	Pavement Markings Clean Sweep	$ 530.00		$ 530.00	
		$ 1,600.00			
BP02-F	Fencing Ace	$ 29,120.00		$ 29,120.00	
BP03-A	Building Concrete Sizelove	$ 200,480.00		$ 200,480.00	Deduct VE change order no. 1. City signed 4/26/99; Sizelove signed 5/11/99; JLG signed 5/13/199.
BP04-A	Masonry Wilks	$ 198,133.00		$ 198,133.00	Deduct VE change order no. 1.
BP05-A	Structural Steel & Erection	$ -		$ -	City to reject bid.
BP-6-A		$ 52,935.00		$ 52,935.00	Deduct VE change order no. 1. Original bid had $10,000 allowance; new allowance of $6,000.
BP06-B	Carpentry Young	$ 185,285.00		$ 185,285.00	Add VE change order no. 1.
BP07-A	Roofing Dobson	$ 20,980.00		$ 20,980.00	Add VE change order no. 1.
BP07-B	Joint Sealants Gorman	$ 9,590.00		$ 9,590.00	Deduct VE change order no. 1.
BP07-C	Sprayed on Fireproofing	$ -		$ -	City to reject.

BP08-A	[redacted]	$ 40,446.00		$ 40,446.00	Add VE change order no. 1. Includes $1300 for FE & cabinets. Original bid had $10,000 allowance; new allowance of $12,000. Signed 6/4 by JLG
BP08-B	Glass & Glazing Martex	$ 23,301.00		$ 23,301.00	Deduct VE change order no. 1.
BP08-C	Overhead Coiling Doors ABC	$ 3,269.00		$ 3,269.00	Deduct VE change order no. 1.
BP09-A	[redacted]	$ 93,346.00		$ 93,346.00	Deduct VE change order no. 1.
BP09-C	Ceramic Tile	$ -		$ -	Reject; no worthwhile value engineering.
BP09-D	Painting National	$ 28,223.00		$ 28,223.00	Deduct VE change order no. 1. Original bid had $2,000 allowance; no allowance VE per Von.
BP09-F	[redacted]	$ 22,915.00		$ 22,915.00	Deduct VE change order no. 1. Allowance remains $500.
BP10-A	Toilet Accessories Texas Chalkboards	$ 7,545.00		$ 7,545.00	
BP10-B	Flag Poles Symonds	$ 1,815.00		$ 1,815.00	
BP10-C	Identification Devices Identitec	$ 2,594.00		$ 2,594.00	
BP10-D	Fire Extinguishers & Cabinets no bid	$ -		$ -	Add to Piper-Weatherford
BP11-B	Food Service Equipment Gernsbacher	$ 95,690.00		$ 95,690.00	Contract amt.: $102,578; no change order.
BP12-A	Horizontal Louver Blinds Sunshine	$ 3,243.00		$ 3,243.00	
BP13-A	Metal Building Ridgemont	$ 84,904.00		$ 84,904.00	Recommended to award 2/24/99.
BP15-A BP15-B	[redacted]	$ 236,125.00		$ 236,125.00	Deduct VE change order no. 1. Original allowance remains per Von 4/9/99.
BP16-A	Electrical Puckett	$ 166,846.00		$ 166,846.00	Deduct VE change order no. 1.
	Epoxy Flooring - Great Lakes Painting	$ 2,900.00		$ 2,900.00	$2900 contract amount.
CM-001	Construction Manager Fee	$ 182,500.00		$ 182,500.00	
ENG-001	[redacted]	$ 24,000.00		$ 24,000.00	$19,000 Construction surveying; $5,000 allowance estimated for topo.

ENG-002		$ 17,000.00		$ 17,000.00	Actual contract amt. $16,300. If CO's have to be issued later we have $700 in budget; deduct from here.
	Civil Engineer RLK Engineering	$ 13,900.00		$ 13,900.00	
		$ 2,500.00		$ 2,500.00	
		$ 9,000.00			
		$ 20,000.00			
		$ 8,000.00			
NC-001	Temporary Construction Facilities	$ 9,000.00		$ 9,000.00	
		$ 4,000.00			
	Furniture and Fixtures	$ 38,387.00		$ 38,387.00	
	City Impact Fees	$ -			
	Permit Fees	$ -			
	TOTAL	$ 1,840,102.00		$ 1,840,102.00	
	Non-Construction Services				
NC-006	Meter Fees	$ 1,500.00		$ 1,500.00	
NC-007	Builder's Risk	$ 3,000.00		$ 3,000.00	
	Contingencies				
C-001	Owner Contingency	$ 65,000.00	$ -	$ 65,000.00	
	A/E Fees	$ 82,500.00		$ 82,500.00	

		Totals	
Construction Costs	$ 2,281,628.00	$ -	$ 2,281,628.00
Non-Construction Services	$ 4,500.00	$ -	$ 4,500.00
Contingencies	$ 147,500.00	$ -	$ 147,500.00
Project Totals	$ 2,433,628.00	$ -	$ 2,433,628.00

EXHIBIT "F"

Operating Standards

1. Greens, practice putting greens & nurseries

   A. Mowing - At least five days per week at a height between 3/16" - 5/16" during the growing season; as needed during the off season.

   B. Change cup locations on all greens and practice putting greens daily during the active season and at least three times weekly in the off-season. Cup location on all greens will be moved at least twenty feet from the previous placement.

   C. Repair ball marks, divots, or any other damaged turf areas on all greens and practice greens daily.

   D. Aerify all greens, practice putting greens and nurseries at least three times per year during the growing season. Aerify problem areas as often as necessary to produce superior turf quality.

   E. Topdress all greens, practice putting greens and nurseries:

      A. After any aerification performed with 1/2" or larger tines;

      B. As needed to maintain a smooth putting surface.

      C. Topdressing will be sand or a mix similar to that used to construct the greens.

   F. Light vertical mowing of all greens, practice putting greens and nurseries shall be performed as appropriate to smooth and true the putting surfaces. Heavy dethatching shall be performed only prior to any winter overseeding.

      Note: Where bermudagrass greens are maintained, they shall be overseeded annually, approximately 2 to 3 weeks before the first annual frost, using perennial rye or a blend of perennial rye, Poa trivialis and/or fine fescues - at a rate between 20 and 30 lbs. per 1,000 square feet.

      The putting surface shall be prepared for overseeding by aerifying not later than 30 days prior to overseeding and verticutting weekly starting three to four weeks prior.

      Overseeding shall be topdressed 1/8" with material similar to green construction material or an approved sand/organic mixture. A complete

D. Set-up - Tee markers and all tee equipment shall be moved daily for proper play and control of turf wear.

E. Weed Control - Tees shall be kept weed free to an extent of at least 90% of the area by the proper and timely application of pre- and/or post-emergent herbicides.

F. Vertical Mowing - All tees shall be verticut as necessary to control mat or thatch build-up.

G. Aerification - All tees shall be aerified at least every two months from March through October and as necessary during the remainder of the year.

H. Fertilization - All tees shall be fertilized with nitrogen, phosphorous, potash, and other elements as needed to maintain color, growth, health and turgidity of the turf, without showing excessive or succulent growth.

3. Fairways - All areas of play except greens, tees, roughs and natural growth areas

A. Mowing - All fairways shall be mowed at least three times per week at a height between 1/2" - 7/8" during the growing season and as needed for the balance of the year.

B. Aerification - All fairways shall be aerified a minimum of three times per year during the growing season. Aerification holes shall not exceed a spacing of eight inches on center or be of a diameter of less than 1/2".

C. Fertilization - All fairways shall be fertilized with nitrogen, phosphorous, potash, or other elements as needed to maintain color, growth, health and turgidity of the turf, without allowing excessive or succulent growth.

D. Vertical mowing - All fairways shall be verticut as necessary to control mat or thatch build-up.

E. Weed Control - Fairways shall be kept weed free to an extent of at least 90% of the area by the proper and timely application of pre- and/or post-emergent herbicides.

4. Roughs

All turfed areas of play except greens, tees, fairways and natural growth areas.

A. Mowing - All roughs shall be mowed weekly during the growing season and as necessary during the balance of the year, at heights between 3/4" and 1-1/2". Rough height shall not exceed 2" without the direct approval of the

regional superintendent, and rough mowing shall not be suspended for any tournament without such approval.

B. Aerification -

1) Fairway-to-tree-line play areas shall be aerified at least two times per year.

2) Within wooded play areas - as necessary to establish and/or maintain turf.

C. Fertilization - Roughs shall be fertilized as necessary to maintain turf.

D. Weed Control - Shall be performed as necessary to prevent seed formation and to allow proper play.

5. Natural Growth Areas

All areas in which native or introduced vegetation is allowed to survive without routine mowing, cultivating, irrigation or other routine maintenance procedures. May be out of play areas, steep slopes, barriers, windbreaks, nature trails, etc. Such areas are to be maintained free of excessive trash, noxious weeds and vertebrate pests, and in such manner as to comply fully with fire department regulations or other such regulations as may apply. Such natural growth areas may be improved and may from time to time be subjected to irrigation, cultivation, pruning, or other such practices as may be necessary or desirable to establish or maintain them.

6. Planters - All areas planted with ornamental plants, not intended for golf play and having a definable border

A. Clean-up - All planters shall be maintained free of trash and debris.

B. Weed Control - All planters shall be maintained free of weeds by mechanical and/or chemical means.

C. Trimming - The plant material (trees, shrubbery and ground covers) in planters shall be trimmed for protection from wind, insect damage, and for appearance.

7. Trees - All trees within the property lines of the golf course

A. Stakes - Trees shall be staked as necessary until of sufficient size to stand unassisted. Stakes shall be installed and maintained in the manner recommended by the University of California. Stakes shall be removed as soon as possible.

B. Pruning - All trees shall be properly pruned for protection from wind and pests as well as for appearance and safety.

C. Irrigation - All trees shall be irrigated to provide adequate moisture for normal growth.

D. Mowing - Large area mowers shall not be used within one foot of the trunk of any tree.

E. Removal and Replacement - When appropriate, all dead trees, for whatever cause, shall be removed. Any necessary replacement shall be with a tree of appropriate type and size.

8. Irrigation - All equipment required to irrigate all areas of the property

A. Repair or replace all heads, valves, controllers, wiring, and pipe as needed to maintain the proper operation of the entire golf course irrigation system (including greens, tees, fairways, planters, flower beds, etc.) on an on-going basis.

B. The golf course shall be irrigated as necessary to support proper growth of golf turf and associated landscaping.

9. Fences - All fences and walls, block, chain link, or barbed wire, etc. on or within boundaries of the property

A. Repair all broken or damaged fencing as necessary.

B. Repair or replace as necessary all fences, gates and locking devices needed for the protection of the golf course or equipment.

10. Clubhouse and structures - All structures within the boundaries of the golf course

A. Course Restrooms - All course restrooms shall be maintained daily to provide clean and sanitary facilities for the users and employees of the course. Soap, towels, toilet paper, etc. shall be provided in adequate quantity at all times. Portable facilities shall be maintained similarly.

B. All buildings and structures shall be maintained in good repair at all times. Surrounding areas shall be maintained free of weeds, brush, disorganized junk or broken-down equipment, trash piles, etc. Interior areas shall be clean and neatly organized, safe and sanitary for customers and employees. Painting, rodent and insect control, and landscaping shall be performed as necessary. "Housekeeping" duties shall be assigned to all maintenance crew members and shall be performed daily.

C. Cart Paths - Maintain all cart paths in a safe and clean condition and repair promptly as needed.

D. The golf course superintendent is responsible for all facilities and structures maintenance not within the clubhouse area proper.

11. Edging

All sidewalks, patios and concrete cart paths must be kept edged. Edging around valve boxes, meter boxes, backflow preventers, etc. shall be done as needed to insure that there is no obstruction of play or maintenance from growth around these item.

12. Sand traps

All sand traps shall be edged as necessary to maintain an appropriate lip, raked daily and filled with fresh sand as needed to maintain a minimum 1/2" depth on slopes and 4" in the bottom. Replacement sand will be of a dust-free type, suitable for trap use.

13. Landscaped areas

The various planting areas throughout the course shall be cultivated, weeded, and pruned on a regular basis, with at least two replanting programs for annuals scheduled each year, depending on the length of the season.

14. Trash and refuse

Shall be collected daily and removed from the property in a safe, sanitary and lawful manner as necessary to minimize or eliminate problems from refuse odors, insects, etc. Approved trash receptacles shall be conveniently stationed on tees and other appropriate areas and emptied daily.

15. Vertebrate pest control

Shall be routinely performed throughout the property on an on-going basis, in such a manner that vertebrate pest populations are steadily reduced and eventually eliminated.

16. Aquatic

All lakes, ponds and streams shall be maintained in a safe and sanitary manner and in good appearance.

17. Soil and Water

Analysis will be performed yearly by an approved professional laboratory.

18. Storage Tanks

Testing and inspection of all storage tanks located at the Leased Property will be performed periodically to verify that no leakage from such tanks has occurred or is occurring and that all storage tanks at the Leased Property comply with Legal Requirements.

EXHIBIT "G"

RECORDING REQUESTED BY
AND WHEN RECORDED MAIL TO:

American Golf Corporation
2951 28th Street
Santa Monica, California 90405
Attn: Theodore F. Kahan, Esq.

MEMORANDUM OF LEASE

1. **Identification and Parties**. This Memorandum of Lease and Right of First Offer to Purchase (this "Memorandum"), is entered into this ___ day of _____1999 by and between THE CITY OF ROWLETT, a municipal corporation ("Lessor") and AMERICAN GOLF CORPORATION, a California corporation ("Lessee").

2. **Grant of Lease and Right of First Offer to Purchase; Term**. For good and valuable consideration, the receipt and sufficiency of which are hereby acknowledged, (a) Lessor leases to Lessee, and Lessee leases from Lessor, the Leased Premises (as defined in the Lease, as defined below), which includes, without limitation, that certain real property ("Property) legally described on Exhibit "A" attached hereto and incorporated herein by this reference, as well as the improvements thereon, for a term expiring on December 31 of the calendar year which is thirty (30) years after the Commencement Date (as defined in the Lease), which expiration date is anticipated to be December 31, 2029, subject to (i) two (2) successive five (5) year options to extend ("Options to Extend") such term in favor of Lessee; and (ii) the other terms and conditions of that certain Lease Agreement ("Lease") of even date herewith between Lessor and Lessee; and (b) Lessor hereby grants to Lessee the right of first offer to purchase the Leased Premises in accordance with the terms and conditions of the Lease for a period expiring on the expiration or sooner termination of the Lease, as the same may be extended by the Options to Extend.

3. **Purpose of Memorandum; Incorporation by Reference; Inconsistencies**. This Memorandum is prepared for recordation purposes only and it in no way modifies any of the terms and conditions of the Lease. All of the terms and conditions of the Lease are incorporated into this Memorandum by this reference as though written out at length herein, and the Lease and this Memorandum shall be deemed to constititute a single instrument. In the event of any inconsistencies between the terms and conditions of this Memorandum and the terms and conditions of the Lease, the terms and conditions of the Lease shall prevail.

4. **Further Assurances**. Lessor and Lessee hereby agree to execute such documents, and do such further acts and things, as the other reasonably requests in order to fully effect the purpose of this Memorandum.

5. **Counterparts**. This Memorandum may be executed in duplicate counterparts, each of which shall be deemed an original, but all of which, when taken together, shall constitute one and the same instrument.

IN WITNESS WHEREOF, the parties hereto have executed this Memorandum as of the date first set forth above.

"LESSOR"

CITY OF ROWLETT,
a municipal corporation

By:_____
Its:_____

"LESSEE"

AMERICAN GOLF CORPORATION,
a California corporation

By:_____
Its:_____

STATE OF CALIFORNIA)
) ss.
COUNTY OF LOS ANGELES)

On August __ 1999, before me, Renee` Lana Mauro, a Notary Public, personally appeared Theodore F. Kahan, personally known to me (or proved to me on the basis of satisfactory evidence) to be the person whose name is subscribed to the within instrument and acknowledged to me that he executed the same in his authorized capacity, and that by his signature on the instrument the person, or the entity upon behalf of which the person acted, executed the instrument.

WITNESS my hand and official seal.

_____
Notary Public, State of _____

My Commission Expires: _____

STATE OF _____)
) ss.
COUNTY OF _____)

On _____, 19__, before me, _____, a Notary Public, personally appeared _____, personally known to me (or proved to me on the basis of satisfactory evidence) to be the person whose name is subscribed to the within instrument and acknowledged to me that he/she executed the same in his/her authorized capacity, and that by his/her signature on the instrument the person, or the entity upon behalf of which the person acted, executed the instrument.

WITNESS my hand and official seal.

_____
Notary Public, State of California

My Commission Expires: _____

Exhibit "H"

Intentionally Omitted

EXHIBIT "I"

Golf Play Easement

THIS GOLF PLAY EASEMENT AGREEMENT (this "Easement"), is entered into this _____ day of _____, 19____, by and between _____ ("Golf Course Owner"), and _____, a _____ corporation, _____, its successors and assigns forever ("Residential Owner").

R E C I T A L S

[TO BE INSERTED]

NOW, THEREFORE, for and in consideration of the mutual covenants and agreements contained herein, and other good and valuable consideration, the receipt and sufficiency of which is hereby acknowledged by each party, hereby agree as follows:

1. Golf Course Play Easement. There is hereby reserved and granted to the owner of the Golf Course Property, along with its servants, independent contractors, agents, members, guests, and invitees (collectively, the "Golf Course Users"), a nonexclusive easement over and across the Residential Development for the following purposes:

1.1 Retrieval of golf balls, including the right to enter on the Residential Development and any lot created thereon, for that purpose, provided the right to retrieve golf balls shall only extend to nonenclosed portions of the Residential Development or lots, and the person retrieving the golf balls shall do so in a reasonable manner and will repair any damage caused by entry onto the Residential Development or lot to retrieve the golf ball;

1.2 Flight of golf balls over, across, and upon the Residential Development;

1.3 Doing of every act necessary and incident to the playing of golf and other recreational activities on the Golf Course Property, including, but not limited to, the operation of lighting facilities for operation of tennis, swimming, driving range, and golf practice facilities during hours of darkness, and the creation of usual and common noise levels associated with such recreational activities;

1.4 Creation of noise related to the normal maintenance and operation of the Golf Course, including, but not

limited to, the operation of mowing and spraying equipment. Such noise may occur from early morning until late evening; and

1.5 An easement for the overspray of herbicides, fungicides, pesticides, fertilizers, and water over portions of the Residential Development located adjacent to the Golf Course Property.

2. Damage by Errant Golf Balls. Residential Owner, for itself and each and every subsequent owner of portions of the Residential Development, hereby acknowledges and agrees that the existence of a golf course on the Golf Course Property is beneficial and highly desirable; however, each such owner acknowledges and agrees that portions of the Residential Development located adjacent to the Golf Course Property are subject to the risk of damage or injury due to errant golf balls. Residential Developer, for itself and each subsequent owner of portions of the Residential Development, their successors and assigns, hereby assumes the risk of damage and injury and hereby releases Golf Course Owner, its lessees, operators, successors and assigns, from any and all liability for damage or injury caused by errant golf balls in, on, or around the Residential Development, and agrees to indemnify and hold Golf Course Owner, its lessees, operators, successors and assigns, harmless from any and all claims, actions, costs or liability arising from any damage or injury caused, directly or indirectly, by golf balls flying, landing, hitting, or resting in or around the Residential Development. The obligation to indemnify, defend, and hold harmless shall pass with title to each portion of the Residential Development, and once any owner of land within the Residential Development has conveyed title to his, her, or its portion of the Residential Development, the obligation ceases as to that owner for all subsequent occurrences and that obligation passes to the new owner.

3. Fencing Restrictions. No owner of land within the Residential Development shall construct a fence or enclosure located along or next to the boundary lines between the Golf course Property and the Residential Development, except in compliance with the Fence Criterion, as defined below. Golf Course Owner and Residential Owner shall develop criteria and specifications for the type, size, and materials they deem acceptable for fences located along the golf Course Property (the "Fence Criterion"). Residential Owner shall make the Fence Criterion available to all owners or prospective owners of land within the Residential Development. The Fence Criterion shall be subject to change by agreement of Golf Course Owner and Residential Owner, provided such changes shall not affect any fences existing at the time such changes become effective, and

such changes shall not be effective until forty five (45) days following publication of such revised fence requirements.

4. Assignment. This Easement shall inure to the benefit of and be binding upon the parties hereto, their successors or assigns. Any subsequent owner of the Residential Development or the Golf Course Property shall be subject to the provisions of this Easement. Following the sale of the Residential Development, or any part thereof, such purchaser or assignee will assume all obligations and inure to all rights hereunder and Residential Developer shall have no further rights or obligations hereunder.

5. Duration and Enforceability. The easements and restrictions set forth in this Easement shall constitute covenants running with the land in perpetuity, burdening the Residential Development, and benefiting the Golf Course Property, and shall be binding upon Residential Developer, its successors and assigns, including, but not limited to, any property or lot owners and all persons or parties claiming through, by, or under Residential Developer, for the benefit of the Golf Course Owner, its lessees, successors and assigns.

6. Costs and Attorneys' Fees. In any action or proceeding under this Easement, the prevailing party shall be entitled to recover its costs and expenses in connection herewith, including reasonable attorneys' fees.

7. Governing Law. This Easement shall be construed and governed under the laws of the State of Illinois.

8. Severability. Each of the provisions of this Easement shall be deemed independent and severable, and the invalidity or unenforceability or partial validity or partial enforceability of the provisions or portion thereof shall not affect the validity or enforceability of any other provisions.

9. Captions for Convenience. The titles, headings, and captions used in this Easement are intended solely for convenience of reference and shall not be considered in construing any of the provisions of this Easement.

IN WITNESS WHEREOF, the parties hereto have caused these presents to be executed in duplicate, as of the day and year first above written.

"Golf Course Owner"

_____

_____

"Residential Owner"

START MAY 1, 2000

SCHEDULE 6.1(a)

FIXED MINIMUM RENT

Lease Year	Fixed Minimum Rent
(a) Lease Year 1 (calendar year 2000)	$393,704
(b) Lease Year 2 (calendar year 2001)	$393,704
(c) Lease Year 3 (calendar year 2002)	$393,704
(d) Lease Year 4 (calendar year 2003)	$393,704
(e) Lease Year 5 (calendar year 2004)	$508,704
(f) Lease Year 6 (calendar year 2005)	$513,704
(g) Lease Year 7 (calendar year 2006)	$523,704
(h) Lease Year 8 (calendar year 2007)	$538,704
(i) Lease Year 9 (calendar year 2008)	$558,704
(j) Lease Year 10 (calendar year 2009)	$573,704
(k) Lease Year 11 (calendar year 2010)	$583,704
(l) Lease Year 12 (calendar year 2011)	$592,411

Lease Year	Fixed Minimum Rent
(m) Lease Year 13 (calendar year 2012)	$594,319
(n) Lease Year 14 (calendar year 2013)	$600,057
(o) Lease Year 15 (calendar year 2014)	$599,612
(p) Lease Year 16 (calendar year 2015)	$607,810
(q) Lease Year 17 (calendar year 2016)	$609,480
(r) Lease Year 18 (calendar year 2017)	$614,603
(s) Lease Year 19 (calendar year 2018)	$618,000
(t) Lease Year 20 (calendar year 2019)	$614,814
(u) Lease Year 21 (calendar year 2020)	$619,863
(v) Lease Year 22 (calendar year 2021)	$622,824
(w) Lease Year 23 (calendar year 2022)	$623,696
(x) Lease Year 24 (calendar year 2023)	$622,438
(y) Lease Year 25 (calendar year 2024)	$633,506
(z) Lease Year 26 (calendar year 2025)	$641,372
(aa) Lease Year 27 (calendar year 2026)	$648,000

Schedule 6.6

Bond Schedules

CITY OF ROWLETT, TEXAS
Outstanding Taxable Debt

Fiscal Year Ending 9/30	General Obligation Bonds Taxable Series 1997A			Combination Tax & Limited Surplus Revenue Certificates of Obligation Taxable Series 1999A		
	Principal	Interest	Total	Principal	Interest	Total
1999	$ -	$ 395,200	$ 395,200	$ -	$ 23,019	$ 23,019
2000	-	395,200	395,200	-	92,075	92,075
2001	-	395,200	395,200	-	92,075	92,075
2002	50,000	393,680	443,680	-	92,075	92,075
2003	60,000	390,336	450,336	-	92,075	92,075
2004	70,000	386,384	456,384	20,000	92,075	112,075
2005	80,000	381,824	461,824	20,000	90,625	110,625
2006	90,000	376,656	466,656	25,000	89,175	114,175
2007	115,000	370,424	485,424	25,000	87,363	112,363
2008	140,000	362,672	502,672	25,000	85,550	110,550
2009	160,000	353,552	513,552	30,000	83,738	113,738
2010	180,000	343,216	523,216	30,000	81,563	111,563
2011	200,000	331,664	531,664	30,000	79,388	109,388
2012	215,000	319,048	534,048	35,000	77,213	112,213
2013	230,000	305,520	535,520	35,000	74,675	109,675
2014	245,000	291,080	536,080	40,000	72,138	112,138
2015	265,000	275,576	540,576	40,000	69,238	109,238
2016	285,000	258,856	543,856	45,000	66,338	111,338
2017	305,000	240,920	545,920	50,000	63,075	113,075
2018	325,000	221,768	546,768	50,000	59,450	109,450
2019	345,000	201,400	546,400	55,000	55,825	110,825
2020	365,000	179,816	544,816	60,000	51,838	111,838
2021	390,000	156,864	546,864	65,000	47,488	112,488
2022	415,000	132,392	547,392	70,000	42,775	112,775
2023	440,000	106,400	546,400	70,000	37,700	107,700
2024	475,000	78,584	553,584	80,000	32,625	112,625
2025	510,000	48,640	558,640	85,000	26,825	111,825
2026	545,000	16,568	561,568	90,000	20,663	110,663
2027				95,000	14,138	109,138
2028				100,000	7,250	107,250
Totals	$ 6,500,000	$ 7,709,440	$ 14,209,440	$ 1,270,000	$ 1,900,044	$ 3,170,044

Fixed Rate Bond Payment is the sum of the two columns labeled "Total."

Schedule 6.1(b)

Additional Minimum Rent

CITY OF ROWLETT, TEXAS
Outstanding Taxable Debt

Fiscal Year Ending 9/30	Combination Tax & Limited Surplus Revenue Certificates of Obligation Taxable Series 1999B		
	Principal	Interest	Total
1999	$ -	$ 8,875	$ 8,875
2000	-	35,500	35,500
2001	-	35,500	35,500
2002	-	35,500	35,500
2003	-	35,500	35,500
2004	-	35,500	35,500
2005	-	35,500	35,500
2006	-	35,500	35,500
2007	-	35,500	35,500
2008	-	35,500	35,500
2009	-	35,500	35,500
2010	-	35,500	35,500
2011	-	35,500	35,500
2012	-	35,500	35,500
2013	500,000	35,500	535,500
Totals	$ 500,000	$ 505,875	$ 1,005,875

Additional Minimum Rent shall be equal to the lesser of (i) the amounts set forth in the column captioned "Interest" on the schedule of Combination Tax and Limited Surplus Revenue Certificates of Obligation Taxable Series 1999B bonds depicted above, or (ii) the interest payable by Lessor under the Series 1999B New Money Bonds following the prepayment or deemed prepayment of principal thereunder.

City of Rowlett

Staff Report

4000 Main Street
P.O. Box 99
Rowlett, TX 75030-0099
www.rowlett.com

AGENDA DATE: 07/01/14 **AGENDA ITEM**: 3B

TITLE

Discuss authorizing the issuance and sale of City of Rowlett, Texas Waterworks and Sewer System Revenue Bonds, Series 2014, Refunding of General Obligation Refunding Taxable Bonds, Series 2010A and General Obligations Taxable Bonds, Series 1997A. (30 minutes)

STAFF REPRESENTATIVE

Brian Funderburk, City Manager
Alan Guard, Chief Financial Officer

SUMMARY

This discussion item encompasses two purposes: 1) to explain the need to issue water and sewer revenue bonds for capital improvements and 2) to discuss the opportunity to restructure the golf course debt at the request of American Golf Corporation.

BACKGROUND INFORMATION

The City of Rowlett last issued water and sewer revenue bonds on August 27, 2012, totaling $8.5 million. The primary purpose of that bond issue, along with the $4.86 million recommended tonight, is to increase the water pressure in the upper pressure zone.

In addition, on September 1, 1999, the City of Rowlett entered into a lease agreement for Waterview Golf Course with American Golf Corporation (AGC). Among other things, the lease calls for AGC to manage the golf course and provides for a schedule of rental payments. These payments were originally designed around the anticipated annual debt on the bonds issued to build the course and contained an escalation over time. In June, AGC proposed to restructure the bonds at their cost. The proposal includes the complete defeasement of the 2010A bonds from a contribution of $1.19 million and the restructuring of the 1997A bonds from a contribution of $1.0 million that would reduce the total debt and extend the life to 25-years. The defeasement of the 2010A bonds and the restructuring of the 1997A bonds would result in annual payments of approximately $250,000-$255,000 per year and AGC has requested that their annual rental payment be reset to match the payment of the bonds.

The current lease represents a 30 year agreement beginning May 1, 2000, and ending December 31, 2030. The agreement provides for two additional five-year lease terms at option of Lessee. If exercised, the lease could be extended through the end of December 31, 2040.

DISCUSSION

Principal and interest payments on water and sewer revenue bonds for the Utility Enterprise Fund are scheduled to decrease in FY2015. The payments will decrease $732,540 in FY2015.

This provides an opportunity for the City of Rowlett to issue additional debt without having an impact on rates.

Revenue bonds are different from other governmental type debt, such as general obligation bonds or certificates of obligation, which require the City to pledge its full faith and credit and utilize taxes to support the debt. Revenue bonds, on the other hand, pledge the revenue stream of the source backing the debt, such as water and sewer revenues. As a result, they are not collateralized by or directly tied to property taxes.

Revenue bonds are also different in that they require several key "covenants", or promises, to protect the bondholders. The City of Rowlett meets each of the bond covenants listed below and will continue to meet the covenants with the issuance of the new bonds. These covenants are as follows:

- Rate maintenance – City pledges to set adequate rates sufficient to earn a minimum of 1.2 times the amount of the annual debt service. This pledge is based on the "net revenues" of the system defined as gross revenues less expenses other than depreciation.
- Bond reserve fund – City pledges to maintain an amount of cash to be set aside for the protection of the bondholders equal to the average annual debt service.
- Bond sinking fund – City pledges to set aside 1/12 of the annual debt service each month in a sinking fund to ensure the semi-annual payments can be made.

Finally, due to the nature of the supporting infrastructure and the need to protect the health, safety and welfare of citizens and customers, revenue bonds are issued without voter approval. Section 7.01 of the Rowlett City Charter states that "the City shall have the right and power to issue tax bonds, revenue bonds, and any other evidences of indebtedness for permanent public improvements or for any other public purpose not prohibited by law or this Charter…" Furthermore, this section requires an affirmative vote of at least 80 percent of the Councilmembers present to approve the bonds.

In FY2013, the declining debt service freed up about $591,670 in annual debt service payments. In addition, the City has issued three bond refundings that have saved the City $136,957, for a total of $728,627 annually over the remaining life of the bonds. The current five year schedule and impact of the new bonds are as follows:

Fiscal Year	Current Scheduled Payments	New Bonds 7-15-14	Total Annual Debt Payments
2014	$5,099,606	$0	$5,099,606
2015	$4,370,979	$347,977	$4,718,956
2016	$4,371,471	$347,977	$4,719,448
2017	$4,368,278	$347,977	$4,716,255
2018	$4,092,668	$347,977	$4,440,645
2019	$3,915,132	$347,977	$4,263,109

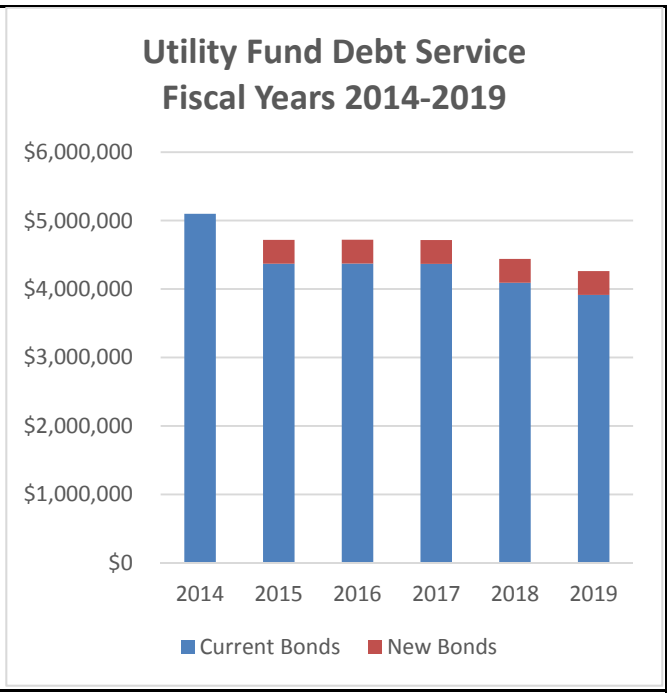

Because of the change in debt service, the City may issue additional revenue bonds for capital construction. As a result, staff has included the restoration of that debt service in FY2014 as part of the budget process for planning purposes and has included those additional bond proceeds as part of the proposed Two-Year Capital Improvements Plan in order to continue addressing water pressure in the upper pressure plane zone. The FY2014 budget originally included a planned sale of $10 million of revenue bonds. However, due to the pace of construction for the Upper Pressure Zone, staff is recommending reducing the sale to $5 million and selling the additional $5 million at some point in FY2015 or early FY2016.

As indicated above, the Proposed Budget includes a Two-Year Capital Improvements Plan for FY2014-FY2015 that anticipates the issuance of the water and sewer bonds to continue addressing water pressure issues and sewer system improvements. The chart below itemizes those capital projects.

Project	FY2014
PGBT Water Line - Miller Heights to RHS	$360,000
Big A Road Water Line Improvements	1,260,000
16" Water Line Miller RR-PGBT	450,000
12" Water Line Miller east of Chiesa	300,000
State Hwy 66 E Sewer Line	850,000
12” Water Line Boyd (LLP)	625,000

Project	FY2014
12" Water Line - Dalrock & Chiesa	1,155,000
Total cost of projects	**$5,000,000**
	New Bonds to be issued

Regarding the refunding of the 2010A and 1997A General Obligation Bonds, American Golf has made a proposal to the City to defease the 2010A bonds and refinance the 1997A bonds in order to reduce the annual payment, establish budget certainty and eliminate the risk of increasing interest rates. This refunding will extend the original term of the debt by 13 years. This refunding will be done as part of an overall package that includes improvements at the Waterview Golf Course, extension of the current contract with American Golf, and a commitment by American Golf to provide funds on an annual basis for future improvements at the golf course.

AGC has asked the City to consider restructuring the 1999 lease agreement. The terms of the proposal are as follows:

- AGC will invest $2.19M as follows:
  - $1.19M to completely defease the outstanding 2010A bonds.
  - $1.0M to buy down principal on 1997A bonds and restructure and extend the term for 25 years.
- City will modify rental income to match the new debt service schedule.
- AGC will exercise the option to extend agreement coterminous with new 25-year bond term. This will end their term on August 15, 2039.
- AGC will invest $75,000 to upgrade kitchen and appurtenances (i.e. tables, chairs, linens, etc). In addition, AGC will invest $139,618 to complete improvements to the clubhouse.
- AGC will set aside 3 percent of annual revenue into a CapEx fund for future improvements.

On May 20, 2014, City staff presented a recommended list of projects from the Golf Advisory Board as well as the funding strategy. This list totaled $830,448, which would be funded by a combination of contributions from the Waterview HOA, existing funds in the Golf Fund, and a three-year note for the remaining balance. Under AGC's proposal, alternate #1 from the clubhouse totaling $147,056 will be removed, the City's portion in cash from the Golf Fund would increase by $172,682 and AGC would cover the balance of $139,618 with no financing necessary. In addition, the City will retain a reserve totaling $255,000, equivalent to one-year debt service.

The proposed amendment to the lease agreement, also on tonight's agenda, will reduce the average annual debt service from $455,000 based on the current schedule to about $250,000-$255,000 a year. It will also extend the remaining debt from the 14 years remaining to 25 years.

FINANCIAL/BUDGET IMPLICATIONS

The Proposed Budget for FY2014 includes debt service payments of $5,099,606 in a/c#160-6069-500-7920. The proposed schedule, even with the new debt, is anticipated to be $380,650 lower at approximately $4,718,956, due to paying off older debt and bond refunding in FY2012 and FY2014. The actual debt service will not be known until the City's financial advisors, First Southwest, price the bonds on July 15, 2014.

The total cost of the projects to be supported by this new debt issuance is $4,860,000, which is the target goal for the sale of the bonds. The refunding of the general obligation debt is related to bonds previously sold strictly related to the Waterview Golf Course. The total issuance of $3,800,000 includes the cost of issuance. The City maintains an AA bond rating from Standard and Poors for governmental debt and an A bond rating for its utility revenue bond debt. Each bond issuance is evaluated to determine if the purchase of bond insurance saves enough interest to justify the cost of the bond insurance. In a recent governmental bond refunding, the City's AA rating was high enough that bond insurance was not necessary. Given the relatively low interest rates in the market today, it is possible that the same will hold true for this bond issuance, although the City will not know for sure until the day the bonds are priced.

The sale of the bonds to refinance the golf course debt and the water and sewer revenue bonds will be split into two separate sales.

In order to meet specific deadlines related to the refunding of the 1997A General Obligation Bonds for the golf course, City Council will have an item for consideration on the agenda at this meeting – an ordinance setting pricing parameters, which will allow for the sale of the refunding bonds through a competitive bid process to occur on July 9, 2014. The proceeds of the refunding bonds plus an American Golf contribution will be used to discharge the 1997A General Obligation Bonds. In addition, Council will consider another ordinance to establish an escrow account in which an American Golf contribution will be deposited in order to defease and discharge the 2010A bonds. These ordinances have been prepared by the City's bond counsel.

The $4,860,000 of Water and Sewer revenue bonds will be sold through a competitive bid process on July 15. City Council will have an item for individual consideration at that meeting to consider approving an ordinance for that sale.

The City will be required to defease the 2010A bonds and refinance the 1997A bonds based on the $2.19 million in contributions from American Golf. The overall annual debt service will drop to about $250,000-$255,000.

In addition, the City will increase its cash contribution to the clubhouse and other golf course improvements from $340,092 to $512,774, an increase of $172,682; however, the City will not need to finance the bulk of the project, which would have cost a total of $480,000 over three years.

Finally, the City's existing reserve of $427,682, which represents one year of debt service on the current schedule will decrease to $255,000, which represents one year of debt service on the new schedule.

RECOMMENDED ACTION

This item is submitted for Individual Consideration this evening.

City of Rowlett

Staff Report

4000 Main Street
P.O. Box 99
Rowlett, TX 75030-0099
www.rowlett.com

AGENDA DATE: 07/01/14 **AGENDA ITEM**: 3C

TITLE

Discuss the replacement of the existing Supervisory Control and Data Acquisition (SCADA) System. (45 minutes)

STAFF REPRESENTATIVE

Tim Rogers, Director of Public Works
Robbin Webber, Assistant Director of Public Works

SUMMARY

The SCADA system (Motorola) has become antiquated and is in need of replacement due to the inability to upgrade the current system. The parts and technical support is not available to enhance or upgrade our system. The purpose of this agenda item is to provide an update to Council on the plan being implemented, educate Council on the needs of the system, and explain the long and short term implementation strategies for the replacement plan.

BACKGROUND INFORMATION

Our current SCADA System was purchased approximately 15 years ago (FY1999). The system is now obsolete, there is no technical support available and replacement parts are difficult to find. In addition, the system has become unreliable (i.e. initiating false alarms, not reporting failures, etc.). Finally, the communication system is out of compliance with FCC as the system is currently utilizing an inadequate bandwidth and is required to convert to a narrow bandwidth.

In FY2011 staff developed a SWOT (Strengths, Weaknesses, Opportunities, Threats) Analysis and Action Plan that identified 23 action items in the Utility. One such item was the need to address the obsolescence of the SCADA system and its shortcomings. The current system prevents efficient monitoring and the ability to address system failure in a timely manner. This was identified as a weakness of the Utility.

In March of 2012, staff presented an evaluation of the Utility System identifying issues with the aging infrastructure. This included the inadequacies of the SCADA System and its unreliability.

In October of 2012, Council approved a rate increase to ensure the improvement of the utility infrastructure to include the replacement of our existing SCADA System.

Since the rate increase, staff began developing a plan to replace the existing system. The first step was to update the current software to maintain operations. Since the updating of the software, staff has researched the different products available and have had demonstrations with different manufacturers (Xylem & Data Flow Systems) of the product.

In June of 2014, staff has entered into a contract with Kimley-Horn, Inc. in the amount of $49,800 to provide specifications and bidding out the replacement of the system.

DISCUSSION

What is a Supervisory Control and Data Acquisition (SCADA) System and why is it important?

In general, SCADA operates with coded signals over communication channels in order to monitor and control remote equipment such as a water tank. SCADA also creates historical data files and report generation for such remote locations throughout the system. This allows an operator to manage the system from one central location as illustrated in the diagram below.

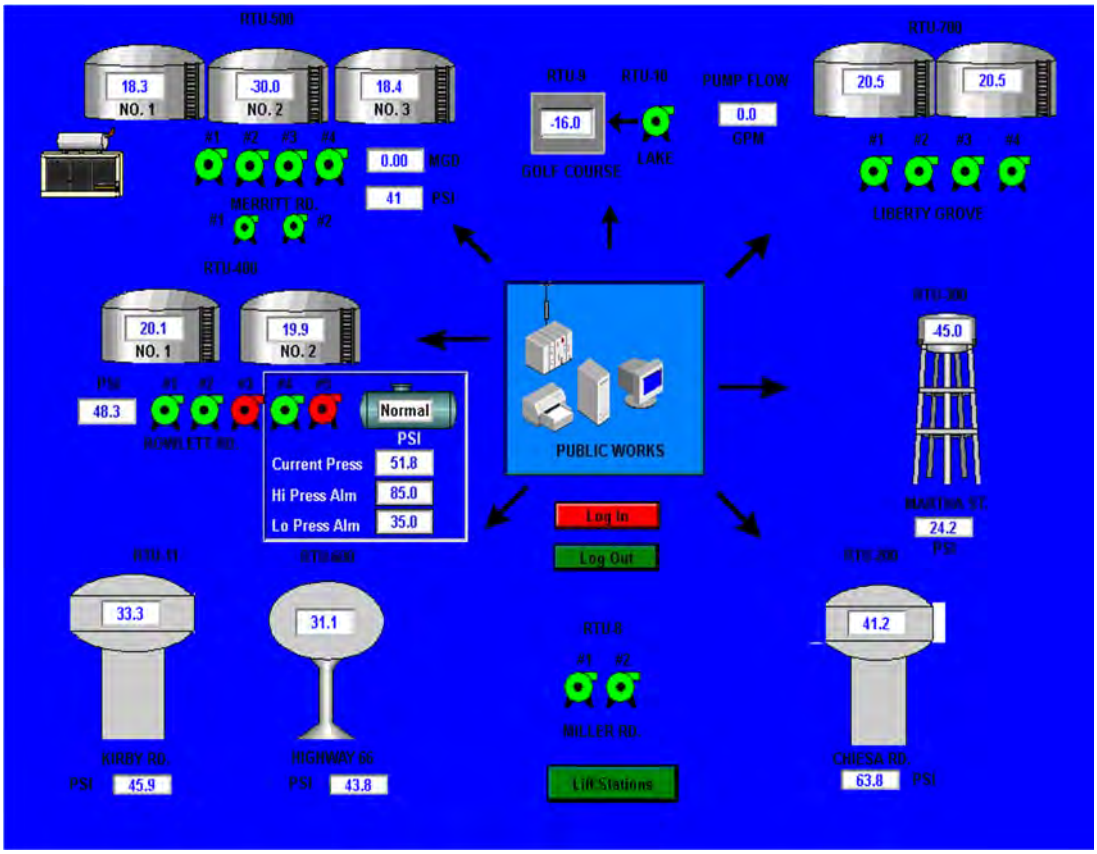

Rowlett's system consists of a total of 34 remote sites: 26 Sanitary Sewer Lift Stations, 3 Potable Water Pumping Stations, and 4 Elevated Storage Tanks with an additional Elevated Storage Tank under construction on Main Street. It also includes a central site located at 4310 Industrial Street.

It has become necessary to develop a plan to purchase a new SCADA System. Staff is discovering failures throughout the system making it unreliable due to false alarms or no reports when an issue actually has occurred. SCADA is a critical component for the success of the operations of our distribution and collection system.

The current system does not provide for full control at all of our lift stations. In fact, there are only two (Liberty Grove & Mallard Reserve) out of 26 lift stations that currently have this function - this reduces our ability to manage overflow due to sewer outages. Due to the geographical location of the City and its pumping stations (proximity to Lake Ray Hubbard), it becomes paramount to ensure an increased reliability for overflow management of our system, thereby enabling staff the ability to control pumps and valves almost instantaneously without having to be onsite.

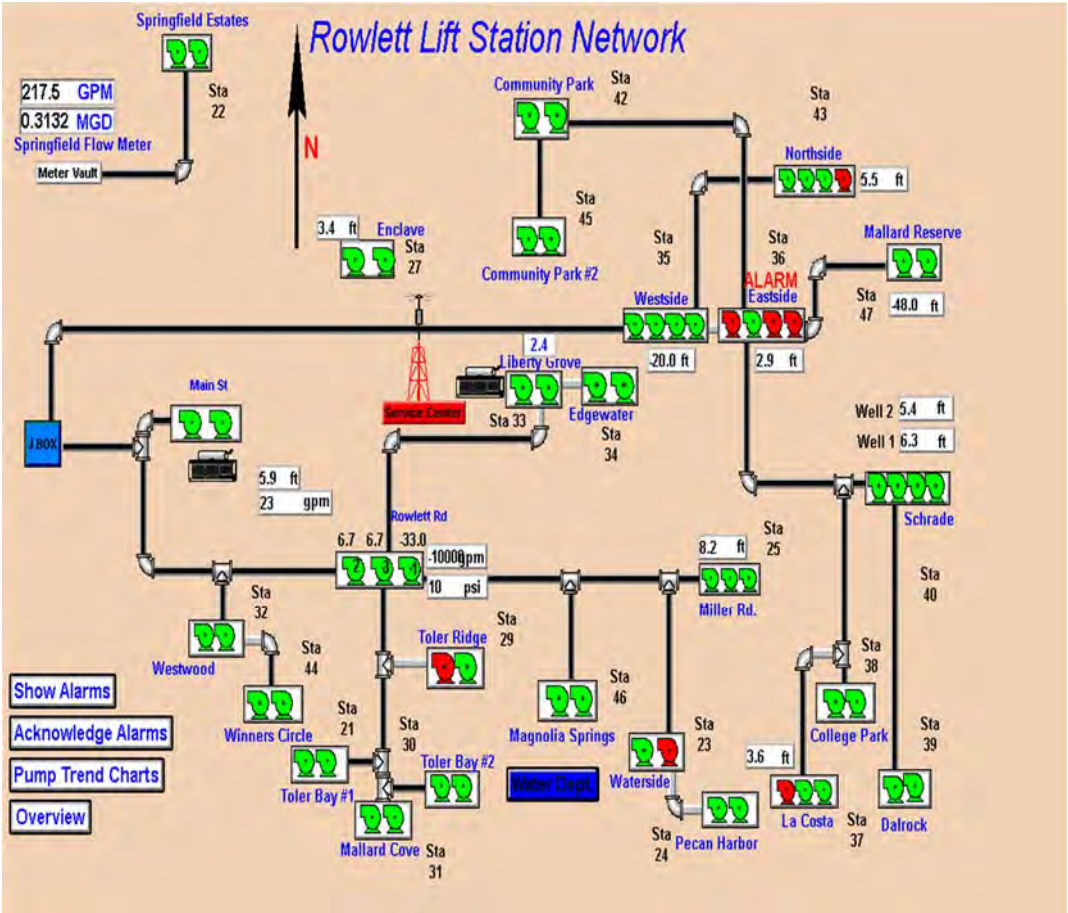

The system also provides for system pressure management within the distribution system. Staff currently controls three potable water pumping stations within this system to ensure water levels are adequate to maintain system pressure. As the SCADA system is becoming more unreliable, it is increasingly difficult to ensure adequate pressure.

In October of 2012, Council approved a rate increase to ensure the improvement of the utility infrastructure to include the replacement of our existing SCADA System. Staff has allocated funds from the Utility Fund Cash CIP contracting with Kimley-Horn, Inc., in the amount of $49,800, to develop specifications, update the communications system, coordinate, design and advertise for bids to purchase the system.

Initially, the first of a two-phase plan to purchase the SCADA System is to obtain bids for the system this fiscal year, and install the Central location and seven remote locations in the first quarter of FY2015. Staff has identified the central station and seven critical remote locations to be replaced in the first phase and are as follows:

1. Central Station (4310 Industrial Street)
2. Rowlett Pump Station
3. Merritt Road Pump Station
4. Liberty Grove Pump Station
5. 1.25 MG Elevated Storage Tank (Main Street)
6. Eastside Lift Station
7. Westside Lift Station
8. Schrade Lift Station

The estimated timeline of the first phase is 180 days and will be complete in FY2015. Location of the remote locations within the first phase is indicated in the map shown below.

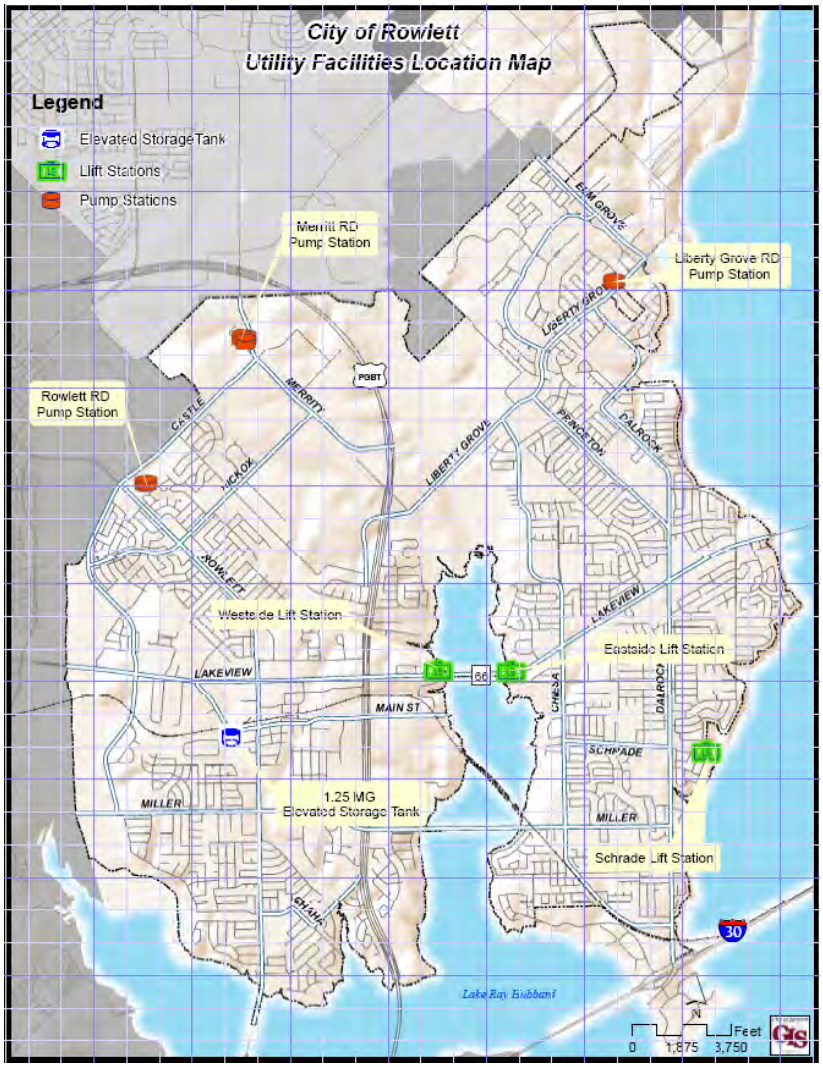

Upon completion of the first phase to purchase and establish the product, staff will then lease-purchase the remaining 27 remote locations (23 lift stations and four elevated storage tanks) in the fourth quarter of FY 2015. Costs associated with the purchase of the SCADA System will be funded from the Utility Fund Cash CIP. Funds are allocated in account number 598-8201-531-8001. The total completion timeline for both phases is 18-24 months.

FINANCIAL/BUDGET IMPLICATIONS

Costs associated with the purchase of the SCADA System will be funded from the Utility Fund Cash CIP. Funds are allocated in account number 598-8201-531.80-01 to cover the scope of services provided by Kimley-Horn, Inc.

Budget Account Number and/or Project Code	Account or Project Title	Budgeted Amount	Proposed Amount
SS2097	598-8201-531.80-01	$110,000	**$49,800**
Total		**$110,000**	**$49,800**

In FY2015, staff has allocated $300,000 from the Utility Fund Cash CIP account number 598-8201-531.80-02, Project Code SS2097 to fund the first phase for the installation of seven (7) remote locations to include the Central Station. The amount of $150,000 will be appropriated in the Utility Fund Cash CIP for the installation of the remaining 27 remote locations over a five year time frame beginning FY2016. The total estimated cost for replacement of the SCADA System is $1.1 million.

The purchase of this SCADA system ensures efficiencies, resulting in cost savings through shorter response times addressing failures within the distribution and collection systems.

The system will not replace the need for staff as these systems still require physical monitoring, managing and maintenance; but allows staff to troubleshoot the system remotely. It will reduce overtime as the utility system can be controlled, adjusted, and attended remotely reducing the need for employees to respond after hours. This will also contribute to the reduction in the risk factor to our employees needing to work after hours.

STAFF RECOMMENDATION

Staff is providing you with an update on the status of the procurement of the replacement SCADA system as this is one item identified through analysis that was paramount to the initiation of the Utility Fund Cash CIP. The City Manager has addressed the approval of the scope of services. No action required at this time. This is for information and discussion only.

City of Rowlett

Staff Report

4000 Main Street
P.O. Box 99
Rowlett, TX 75030-0099
www.rowlett.com

AGENDA DATE: 07/01/14 **AGENDA ITEM**: 5A

TITLE

Proclamation recognizing July as National Parks and Recreation Month.

STAFF REPRESENTATIVE

Jermel Stevenson, Director of Parks and Recreation
Keith Flournoy, Parks Division Manager
Angie Smith, Recreation Division Manager

BACKGROUND INFORMATION

Since 1985, America has celebrated the month of July as the nation's official Parks and Recreation Month. Each July, the National Recreation and Parks Association encourages recreation facilities and parks across the country to kick off summer programs, promote outdoor physical recreation, and pull together volunteers to make their outdoor space a thriving center of community activity.

DISCUSSION

This year, in an effort to play its role in local tourism, the Parks and Recreation Department has planned plenty of dynamic activities, beginning with the Fireworks on Main in Downtown Rowlett. Fireworks on Main will include vendor booths, festival food, free children's area with bounce houses and face painting, entertainment and a fireworks show beginning at approximately 9:30 pm. Once again for 2014, the Department will take it "old school" with Sheena Easton as this year's headliner. She will appear on stage at approximately 8:00pm on Friday, July 4th. A local cover band by the name of "Time Train" will kick off the evening at 6:00pm.

Each year, the National Recreation and Parks Association designates a theme for the month of July. As part of the National Parks and Recreation Month celebrations, July has been designated as "Out is In" month! The Rowlett Parks and Recreation Department is taking this theme directly to our local teens! We will focus on getting them OUT of the house, and IN our facilities including City of Rowlett parks, the Community Centre and Wet Zone Waterpark and involved in healthy, safe recreation opportunities. Each week will bring not only new education sessions on topics such as health, self-esteem, peer pressure and bullying but also two hours of fun structured activities led by our Recreation Staff. Each week, the program will meet at a new location and cover all new teen appropriate topics. The program will end with a Community Centre lock-in available only to program participants! The program will kick off on Saturday, July 12.

Another tourism attraction is the State recognized Paddling Trail located at Paddle Point Park. There will be hundreds of kayakers and paddle boat users at Paddle Point Park during the month of July. Lakeside Park is also utilized as a major fishing location for anglers within the area. During the early morning and late evening hours, hundreds of anglers utilize the park as a location to fish.

In cooperation with the Sports Associations, the Parks and Recreation Department will host several baseball and softball games and tournaments. These tournaments and games bring thousands of players and participants from all over the Metroplex to Community Park during the month.

The Wet Zone Water Park also plays a vital role in local tourism during Parks and Recreation month. During the month of July, the Water Park will conduct swimming classes, offer Friday night movies and have special events. On an annual basis, the Parks and Recreation system has approximately 500,000 visitors and participants; the month of July is a major contribution to this annual number.

ATTACHMENT
Proclamation

PARKS AND RECREATION MONTH

WHEREAS, parks and recreation programs are an integral part of communities throughout this country, including City of Rowlett; and

WHEREAS, our parks and recreation are vitally important to establishing and maintaining the quality of life in our communities, ensuring the health of all citizens, and contributing to the economic and environmental well-being of a community and region; and

WHEREAS, parks and recreation programs build healthy, active communities that aid in the prevention of chronic disease, provide therapeutic recreation services for those who are mentally or physically disabled, and also improve the mental and emotional health of all citizens; and

WHEREAS, parks and recreation programs increase a community's economic prosperity through increased property values, expansion of the local tax base, increased tourism, the attraction and retention of businesses, and crime reduction. Parks and recreation areas are fundamental to the environmental well-being of our community; and

WHEREAS, parks and natural recreation areas improve water quality, protect groundwater, prevent flooding, improve the quality of the air we breathe, provide vegetative buffers to development, and produce habitat for wildlife; and

WHEREAS, our parks and natural recreation areas ensure the ecological beauty of our community and provide a place for children and adults to connect with nature and recreate outdoors; and

WHEREAS, the National Recreation and Parks Association has designated July as Parks and Recreation Month; and

WHEREAS, City of Rowlett recognizes the benefits derived from parks and recreation resources.

NOW THEREFORE, I, Todd W. Gottel, Mayor of the City of Rowlett, Texas, on behalf of the City Council do hereby proclaim the month of July as Parks and Recreation Month in the City of Rowlett

.

City of Rowlett

Staff Report

4000 Main Street
P.O. Box 99
Rowlett, TX 75030-0099
www.rowlett.com

AGENDA DATE: 07/01/14 **AGENDA ITEM**: 5B

TITLE

Hear presentation of the Monthly Financial report for the period ending May 31, 2014.

STAFF REPRESENTATIVE

Alan Guard, Chief Financial Officer

SUMMARY

Attached is the Comprehensive Monthly Financial Report for May 2014, in accordance with the City Council's financial strategy to provide timely and accurate reporting. The fiscal year for the City of Rowlett is October 1 through September 30. Eight months of FY2014, or 66.7 percent of the fiscal year is complete.

BACKGROUND INFORMATION

The City of Rowlett Department of Financial Services is dedicated to excellence in local government, comprehensive fiscal management, compliance and reporting. The Comprehensive Monthly Finance Report (CMFR) is a unique document that is prepared each month and is directed at providing our audience (internal and external users), with important information about the City's financial position and operations.

DISCUSSION

Attached is the Comprehensive Monthly Financial report for May 2014. Eight months of FY2014, or 66.7 percent of the fiscal year is complete.

Revenues: Overall, the City has earned or received $59.2 million for FY2014. This amount is 72.7 percent of the approved operating budget of $81.4 million and is 0.7 percent more than forecast through the month of May.

- General Fund revenues are $0.8 million or 3.0 percent higher than expected.
- Utility Fund revenues are $0.7 million or 4.4 percent lower than expected.

Expenditures: Expenses totaled $55.8 million year-to-date for FY2014. This amount is 68.8 percent of the approved operating budget of $81.0 million and is 1.5 percent lower than forecast through the month of May.

- General Fund expenditures are $1.1 million or 4.9 percent lower than expected.
- Utility Fund expenditures are $0.2 million or 0.9 percent lower than expected.

Surplus: The net surplus from operations through May is $3.4 million, which is $1.2 million better than expected at this point in the year. The adopted operating budget for the fiscal year anticipates a total increase of $0.4 million.

FINANCIAL/BUDGET IMPLICATIONS

N/A

RECOMMENDED ACTION

Information only. The Comprehensive Monthly Financial Report – May 31, 2014, is attached to this agenda item as Attachment 1.

ATTACHMENT

Attachment 1 – Comprehensive Monthly Financial Report – May 31, 2014

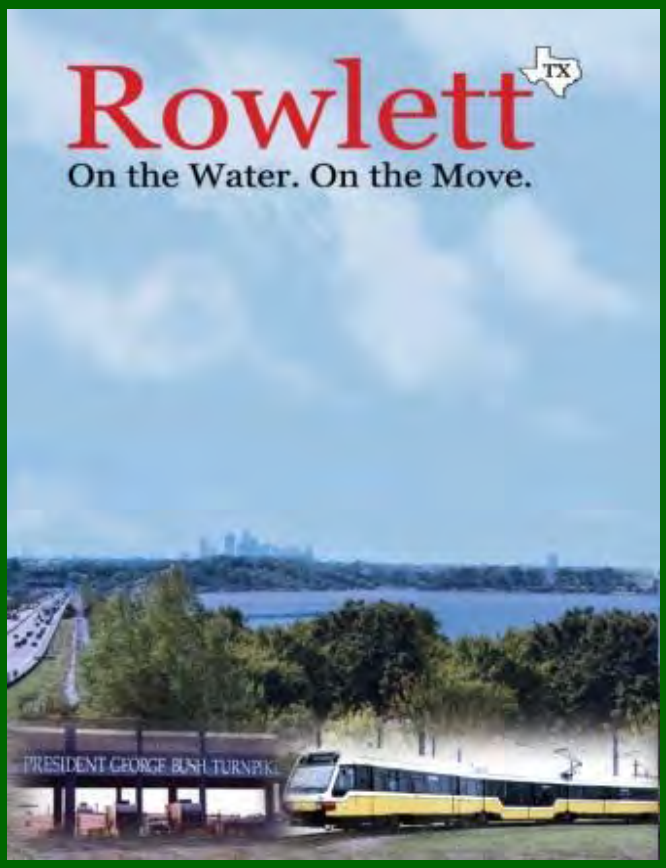

Rowlett
TEXAS

Comprehensive Monthly Financial Report

May 2014

Rowlett TEXAS

MONTHLY FINANCIAL REPORT

PERFORMANCE AT A GLANCE — MAY 2014

	YEAR TO DATE	REFERENCE
ALL FUNDS SUMMARY	POSITIVE	Page 4
GENERAL FUND REV VS EXP	POSITIVE	Page 5
PROPERTY TAXES	POSITIVE	Page 5
SALES TAXES	POSITIVE	Page 6
FRANCHISE FEES	POSITIVE	Page 6
UTILITY FUND REV VS EXP	WARNING	Page 7
SEWER REVENUES	WARNING	Page 7
WATER REVENUES	NEGATIVE	Page 8
WATER USAGE	NEGATIVE	Page 8
REFUSE FUND REV VS EXP	NEGATIVE	Page 9
DRAINAGE FUND REV VS EXP	POSITIVE	Page 9
DEBT SERVICE FUND REV VS EXP	POSITIVE	Page 10
EMPLOYEE BENEFITS REV VS EXP	POSITIVE	Page 10

PERFORMANCE INDICATORS

POSITIVE = Positive variance or negative variance < 1% compared to seasonal trends.

WARNING = Negative variance of 1-5% compared to seasonal trends

NEGATIVE = Negative variance of >5% compared to seasonal trends.

Rowlett
TEXAS

ECONOMIC INDICATORS

ECONOMY

National GDP:

GDP - the output of goods and services produced by labor and property located in the US – decreased at a rate of 1.0% in the 1st quarter of 2014 after increasing 2.6% in the 4th quarter of 2013 as reported by the Bureau of Economic Analysis. The slowdown in growth reflects a significant decline in inventory investment, notably by motor vehicle dealerships.

Texas Retail Sales:

Texas retail sales totaled $41.1 billion for the month of April, a decrease of $2.7 billion (6.2%) over April 2013.

Texas Leading Index:

The Texas Leading Index is a single summary statistic that sheds light on the future of the state's economy. The index is a composite of eight leading indicators—those that tend to change direction before the overall economy. The index increased 0.8% between the months of March and April.

UNEMPLOYMENT

National Unemployment:

The national unemployment rate remained flat at 6.3% from April to May.

State-Wide:

The Texas unemployment rate for May, 2014 was 5.1%, 1.4% less than May, 2013.

Rowlett:

The City of Rowlett unemployment rate for May, 2014 was 5.1%, 1.1% less than May, 2013. Note – city unemployment rates are not seasonally adjusted.

MAY 30, 2014 – NEWS FOR YOU

Attached is the Comprehensive Monthly Financial report for May 2014. Eight months of FY 2014, or 66.7% of the fiscal year is complete.

Revenues: Overall, the City has earned or received $59.2 million for FY 2014. This amount is 72.7% of the approved operating budget of $81.4 million and is 0.7% more than forecast through the month of May.

- General Fund revenues are $0.8 million or 3.0% higher than expected.
- Utility Fund revenues are $0.7 million or 4.4% lower than expected.

Expenditures: Expenses totaled $55.8 million year-to-date for FY 2014. This amount is 68.8% of the approved operating budget of $81.0 million and is 1.5% lower than forecast through the month of May.

- General Fund expenditures are $1.1 million or 4.9% lower than expected.
- Utility Fund expenditures are $0.2 million or 0.9% lower than expected.

Surplus: The net surplus from operations through May is $3.4 million which is $1.2 million better than expected at this point in the year. The adopted operating budget for the fiscal year anticipates a total increase of $0.4 million.

NOTEWORTHY

Stage 3 Water Restrictions Extended Through at Least Oct 31- Once Every TWO Weeks Watering in Effect

Due to below average rainfall and extremely low lake levels, the North Texas Municipal Water District (NTMWD) has voted to remain in Stage 3 restrictions. Landscape irrigation is limited to ONCE EVERY TWO WEEKS based on the physical address with no watering between 10am and 6pm. This will continue at least through October 31, 2014.

Fireworks on Main features 80's Legend Sheena Easton in concert - July 4!

Fireworks on Main - Friday, July 4 from 6:00 - 10:00 P.M.
Fireworks at approximately 9:30

CITY OF ROWLETT, TEXAS
FINANCIAL STATUS DASHBOARD
May 31, 2014

BUDGET SUMMARY OF ALL FUNDS FY2014

	2014 Budget	2014 Forecast	2014 Year-to-Date	Variance
Beginning Reserves	**$ 16,862,505**	**$ 16,862,505**	**$ 16,862,505**	**0.0%**
Revenues:				
General	33,671,772	26,145,587	26,942,791	3.0%
Water & sewer	27,531,543	16,886,524	16,147,275	-4.4%
Debt service	8,246,662	7,873,707	7,851,183	-0.3%
Drainage	1,346,939	897,963	887,351	-1.2%
Refuse	4,835,889	3,223,947	3,278,386	1.7%
Employee health benefits	4,095,123	2,730,082	2,588,108	-5.2%
Impact fees	44,357	29,810	261,002	775.6%
Police seizure	100,550	67,033	128,888	92.3%
Economic development	316,694	211,129	210,917	-0.1%
Innovations	-	-	997	0.0%
Hotel/motel tax	47,752	28,794	35,855	24.5%
P.E.G.	85,042	42,098	45,486	8.0%
Grants	41,838	25,568	122,969	381.0%
Community Development Block Grant	191,254	127,504	159,991	25.5%
Inspection Fees Fund	169,333	112,889	140,858	24.8%
Juvenile diversion	33,281	22,187	24,667	11.2%
Court technology	26,936	17,957	19,919	10.9%
Court security	20,035	13,357	14,541	8.9%
Golf course	601,728	301,181	301,888	0.2%
Total Revenues	$ 81,406,728	$ 58,757,317	$ 59,163,072	**0.7%**
Expenses:				
General	35,101,079	23,240,759	22,107,755	-4.9%
Water & sewer	25,703,823	18,637,466	18,464,012	-0.9%
Debt service	8,246,662	6,778,801	6,811,717	0.5%
Drainage	1,303,580	894,516	833,983	-6.8%
Refuse	4,728,613	3,168,315	3,416,261	7.8%
Employee health benefits	4,070,097	2,713,398	2,463,146	-9.2%
Impact fees	30,000	20,000	45,887	129.4%
Police seizure	100,550	67,033	497,855	642.7%
Economic development	355,588	234,237	228,335	-2.5%
Innovations	224,605	149,737	254,063	69.7%
Hotel/motel tax	42,749	28,499	6,534	-77.1%
P.E.G.	71,811	46,953	46,514	-0.9%
Grants	41,838	25,568	122,969	381.0%
Community Development Block Grant	191,254	127,504	159,991	25.5%
Inspection Fees Fund	146,144	97,429	3,716	-96.2%
Juvenile diversion	33,210	22,140	19,402	-12.4%
Court technology	29,145	19,430	75,087	286.4%
Court security	24,102	16,068	21,847	36.0%
Golf course	601,728	326,288	204,583	-37.3%
Total Expenses	$ 81,046,578	$ 56,614,140	$ 55,783,656	**-1.5%**
Current Year Surplus/(Shortfall)	**$ 360,150**	**$ 2,143,177**	**$ 3,379,417**	**57.7%**
Ending Reserves	**$ 17,222,655**	**$ 19,005,682**	**$ 20,241,922**	**6.5%**

Positive	Positive variance or negative variance <1% compared to forecast
Warning	Negative variance between 1%-5% compared to forecast
Negative	Negative variance >5% compared to forecast

CITY OF ROWLETT, TEXAS
FINANCIAL STATUS DASHBOARD
May 31, 2014

OVERALL FUND PERFORMANCE

GENERAL FUND REVENUES VS EXPENSES FY2014

Month	2014 Revenue	2014 Expenses	Monthly Variance
Oct	1,600,503	2,235,034	$ (634,531)
Nov	1,555,810	3,052,790	(1,496,980)
Dec	11,090,742	2,532,120	8,558,622
Jan	5,184,857	2,858,962	2,325,895
Feb	2,670,847	2,488,264	182,583
Mar	2,084,191	2,653,398	(569,207)
Apr	1,173,782	3,439,351	(2,265,569)
May	1,582,059	2,847,836	(1,265,777)
Jun			-
Jul			-
Aug			-
Sep			-
Total	$ 26,942,791	$ 22,107,755	$ 4,835,036
Cumulative Forecast	*$ 26,145,587*	*$ 23,240,759*	*$ 2,904,828*
Actual to Forecast $	*$ 797,204*	*$ (1,133,004)*	*$ 1,930,208*
Actual to Forecast %	*3.0%*	*-4.9%*	

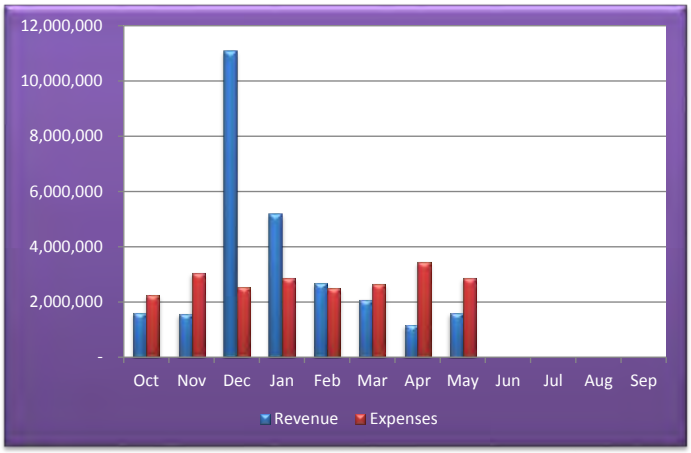

Positive

Cumulatively overall, the General Fund is better than forecasted for this time of the year, with revenues exceeding the forecast by 3.0% and expenses 4.9% lower than forecasted. These differences are primarily due to higher than expected property tax collections and sales tax revenues, vacancy savings and lower than expected supplies expenses.

REVENUE ANALYSIS

PROPERTY TAXES FY2014

Month	2014 Forecast	2014 Actual	Monthly Variance
Oct	$ 388,488	$ 460,233	$ 71,745
Nov	561,872	531,720	(30,152)
Dec	8,847,877	9,078,518	230,641
Jan	3,403,794	3,978,058	574,264
Feb	1,608,725	1,136,084	(472,641)
Mar	290,844	181,028	(109,816)
Apr	184,755	118,224	(66,531)
May	117,901	86,854	(31,047)
Jun	140,464		
Jul	102,440		
Aug	89,645		
Sep	50,372		
Total	$ 15,787,177	$ 15,570,719	$ 166,463
Actual to Forecast			*1.1%*

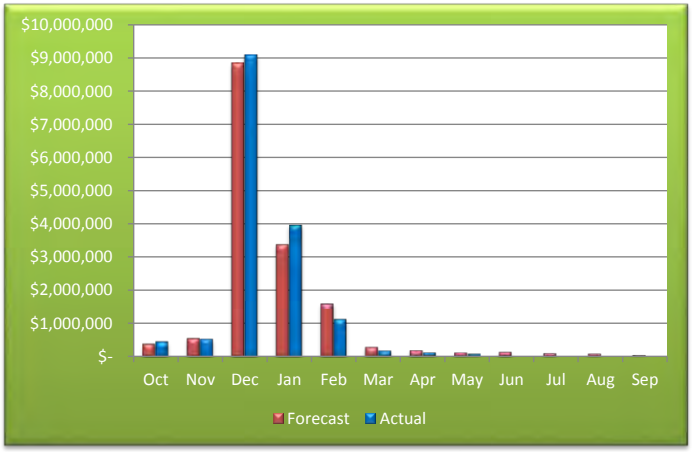

Positive

Property taxes represents nearly 50% of the total General Fund revenue budget and serves as the primary funding source for the general government. Property taxes are generally collected in December of each year. Cumulatively overall, property tax revenues are 1.1% higher than forecasted for this time of the year.

CITY OF ROWLETT, TEXAS
FINANCIAL STATUS DASHBOARD
May 31, 2014

REVENUE ANALYSIS

SALES TAXES FY2014

Month	2014 Forecast	2014 Actual	Monthly Variance
Oct	$ 459,941	$ 427,851	$ (32,090)
Nov	394,348	414,283	19,935
Dec	558,732	565,590	6,858
Jan	389,630	399,637	10,007
Feb	361,544	348,585	(12,959)
Mar	485,196	556,530	71,334
Apr	416,016	437,942	21,926
May	417,960	417,960	-
Jun	557,046		
Jul	410,975		
Aug	434,864		
Sep	526,923		
Total	$ 5,413,175	$ 3,568,377	$ 85,010
Actual to Forecast			*2.4%*

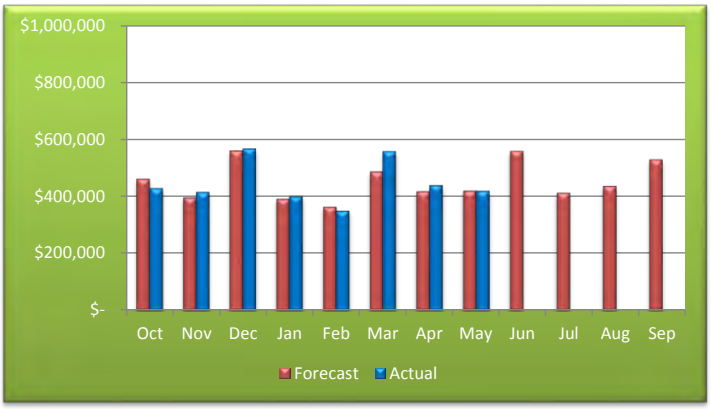

Positive

Sales tax is an important indicator of financial health for the Rowlett community. Sales taxes are collected by the State Comptroller and are recorded two months later. The sales taxes reported here for April are 5.3% higher than projected. Cumulatively, sales taxes are 2.4% higher than projected. Sales taxes for May are an estimate.

REVENUE ANALYSIS

FRANCHISE FEES FY2014

Month	2014 Forecast	2014 Actual	Monthly Variance
Oct	$ -	$ -	$ -
Nov	-	-	-
Dec	652,928	-	(652,928)
Jan	-	405,092	405,092
Feb	333,775	659,673	325,898
Mar	642,098	-	(642,098)
Apr	-	346,431	346,431
May	-	278,919	278,919
Jun	528,568		
Jul	-		
Aug	-		
Sep	852,633		
Total	$ 3,010,000	$ 1,690,115	$ 61,315
Actual to Forecast			*3.8%*

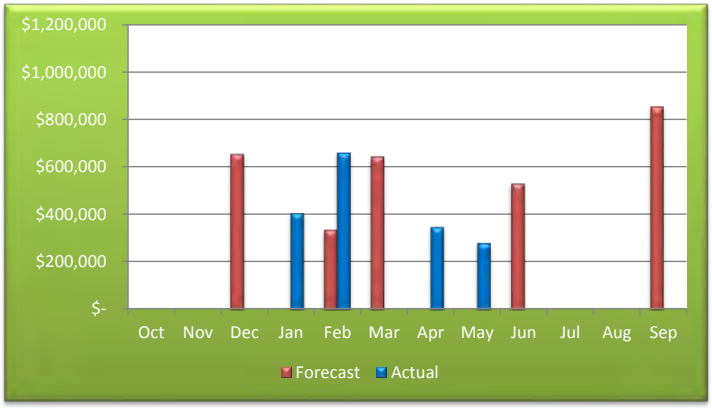

Positive

Franchise fees represents nearly 10% of the total General Fund budget and include electric, gas, cable and telecommunications. Most fees are paid quarterly with natural gas being paid yearly in February. Franchise payments are currently 3.8% lower than projected for the fiscal year.

CITY OF ROWLETT, TEXAS
FINANCIAL STATUS DASHBOARD
May 31, 2014

OVERALL FUND PERFORMANCE

UTILITY FUND REVENUES VS EXPENSES FY2014

Month	2014 Revenue	2014 Expenses	Monthly Variance
Oct	$ 2,506,570	$ 1,769,999	$ 736,571
Nov	2,111,806	2,053,463	58,343
Dec	1,899,070	1,913,043	(13,973)
Jan	1,894,254	1,945,298	(51,044)
Feb	1,840,086	1,845,514	(5,429)
Mar	1,865,352	5,579,472	(3,714,120)
Apr	1,937,442	1,721,349	216,092
May	2,092,697	1,635,873	456,824
Jun			-
Jul			-
Aug			-
Sep			-
Total	$ 16,147,275	$ 18,464,012	$ (2,316,737)
Cumulative Forecast	*$ 16,886,524*	*$ 18,637,466*	*$ (1,750,942)*
Actual to Forecast $	*$ (739,248)*	*$ (173,454)*	*$ (565,794)*
Actual to Forecast	*-4.4%*	*-0.9%*	

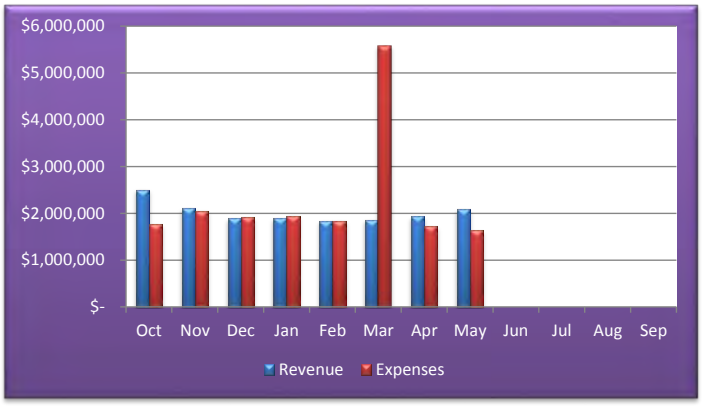

Warning

Utility fund revenues are 4.4% lower than forecast, and expenses are 0.9 lower than expected. These differences are primarily due to lower than expected water and sewer revenues. The fund makes semi-annual debt payments in March and September.

REVENUE ANALYSIS

SEWER REVENUES FY2014

Month	2014 Forecast	2014 Actual	Monthly Variance
Oct	$ 919,553	$ 950,609	$ 31,056
Nov	907,875	832,809	(75,066)
Dec	942,658	791,813	(150,845)
Jan	738,313	788,346	50,033
Feb	750,346	757,401	7,055
Mar	837,264	780,639	(56,625)
Apr	847,397	802,118	(45,279)
May	886,960	861,106	(25,854)
Jun	884,119		
Jul	1,006,135		
Aug	1,014,318		
Sep	1,058,609		
Total	$ 10,793,547	$ 6,564,841	$ (265,525)
Actual to Forecast			*-3.9%*

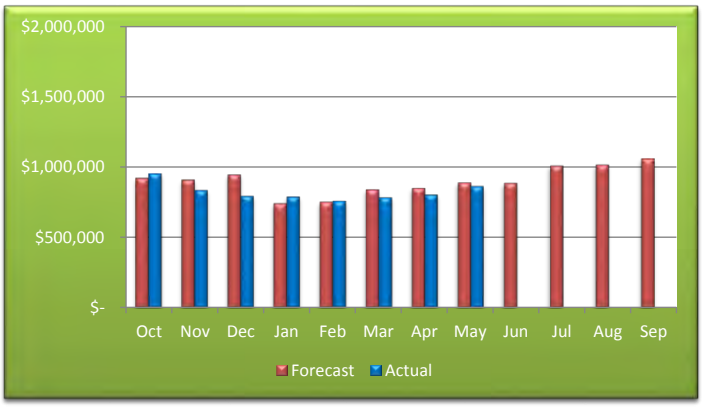

Warning

Sewer sales represent over 40% of the Utility Fund budget and cover the cost of sewer treatment paid to City of Garland. Cumulatively overall, sewer revenues are 3.9% lower than forecasted for this time of year.

CITY OF ROWLETT, TEXAS
FINANCIAL STATUS DASHBOARD
May 31, 2014

REVENUE ANALYSIS

WATER REVENUES FY2014

Month	2014 Forecast	2014 Actual	Monthly Variance
Oct	$ 1,256,608	$ 1,432,250	$ 175,642
Nov	1,350,960	1,153,189	(197,771)
Dec	1,260,545	1,019,459	(241,086)
Jan	1,121,060	995,804	(125,256)
Feb	983,482	955,899	(27,583)
Mar	1,114,506	988,809	(125,697)
Apr	1,167,772	1,036,762	(131,010)
May	1,239,689	1,136,453	(103,236)
Jun	1,278,088		
Jul	1,552,096		
Aug	1,663,331		
Sep	1,831,139		
Total	$ 15,819,276	$ 8,718,624	$ (775,998)
Actual to Forecast			*-8.2%*

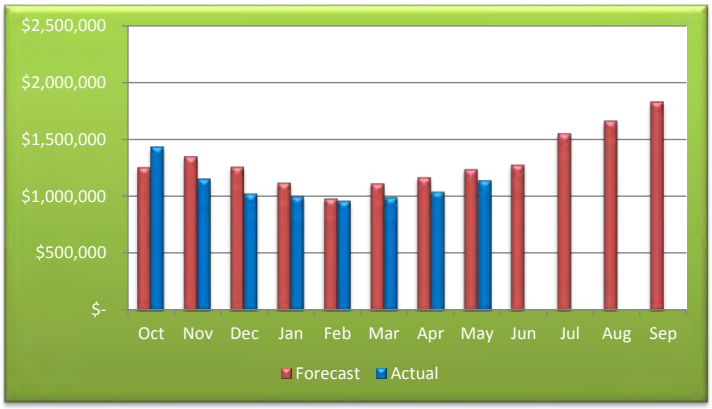

Negative

Water sales represent just over 50% of the total Utility Fund budget and cover the cost of water acquisition from the North Texas Municipal Water District. Water revenues are 8.2% less than forecasted for this time of year.

REVENUE ANALYSIS

WATER USAGE FY2014

(IN THOUSAND GALLONS)

Month	2014 Forecast	2014 Actual	Monthly Variance
Oct	214,791	244,924	30,133
Nov	196,050	163,192	(32,858)
Dec	256,386	131,044	(125,342)
Jan	135,250	119,810	(15,440)
Feb	90,680 *	63,297	(27,383)
Mar	111,904	174,862	62,958
Apr	124,977	133,624	8,647
May	133,120	162,355	29,235
Jun	140,531		
Jul	205,774		
Aug	231,212		
Sep	269,573		
Total	2,110,249	1,193,108	(70,051)
Actual to Forecast			*-5.5%*

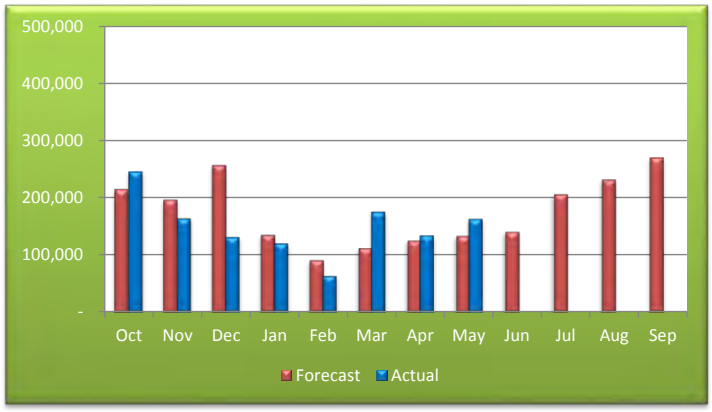

Negative

The City purchases its water from the North Texas Municipal Water District. Customer usage is 5.5% lower than forecasted for this time of the year. The contract with NTMWD requires the City to pay for a minimum of 3.2 billion gallons of water per year. *Budget amendment approved by City Council in February.

CITY OF ROWLETT, TEXAS
FINANCIAL STATUS DASHBOARD
May 31, 2014

OVERALL FUND PERFORMANCE

REFUSE FUND REVENUES VS EXPENSES FY2014

Month	2014 Revenue	2014 Expenses	Monthly Variance
Oct	$ 393,619	$ 395,068	$ (1,449)
Nov	396,211	388,645	7,567
Dec	401,618	388,287	13,331
Jan	398,650	391,384	7,266
Feb	396,073	680,753	(284,680)
Mar	400,681	381,364	19,317
Apr	430,529	400,245	30,284
May	461,005	390,515	70,490
Jun			-
Jul			-
Aug			-
Sep			-
Total	$ 3,278,386	$ 3,416,261	$ (137,875)
Cumulative Forecast	*$ 3,223,947*	*$ 3,168,315*	*$ 55,632*
Actual to Forecast $	*$ 54,438*	*$ 247,945*	*$ (193,507)*
Actual to Forecast	*1.7%*	*7.8%*	

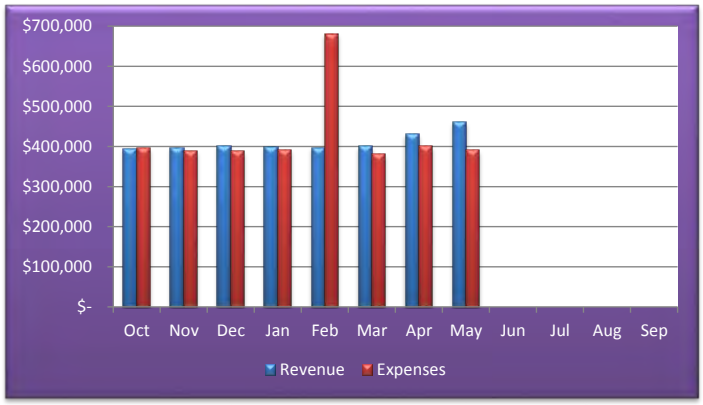

Negative

The Refuse Fund accounts for monies collected from customers on their utility bills and remitted to our solid waste provider. Revenues are currently 1.7% higher than forecasted, and expenses are 7.8% higher than forecasted due to expenses from the ice storm cleanup.

OVERALL FUND PERFORMANCE

DRAINAGE FUND REVENUES VS EXPENSES FY2014

Month	2014 Revenue	2014 Expenses	Monthly Variance
Oct	$ 111,003	$ 61,084	$ 49,919
Nov	110,081	63,512	46,569
Dec	110,877	73,691	37,186
Jan	110,715	70,278	40,437
Feb	110,681	347,255	(236,574)
Mar	110,885	68,186	42,699
Apr	111,456	82,602	28,854
May	111,653	67,375	44,278
Jun			-
Jul			-
Aug			-
Sep			-
Total	$ 887,351	$ 833,983	$ 53,368
Cumulative Forecast	*$ 897,963*	*$ 894,516*	*$ 3,448*
Actual to Forecast $	*$ (10,612)*	*$ (60,533)*	*$ 49,920*
Actual to Forecast	*-1.2%*	*-6.8%*	

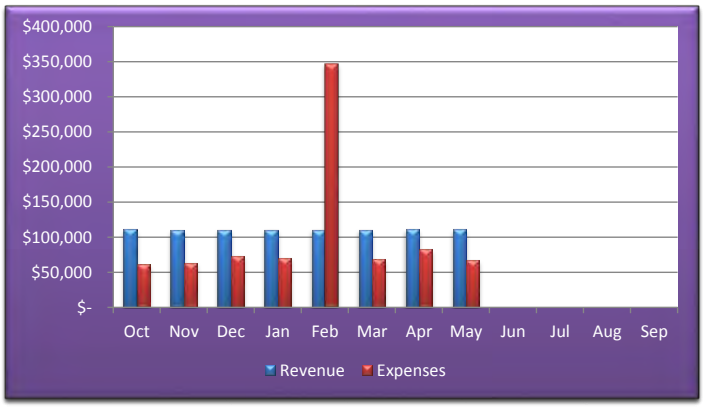

Positive

The Drainage Fund accounts for monies collected from customers on their utility bills for the municipal drainage system. Cumulatively overall, the fund is better than forecasted for this time of the year, with revenues 1.2% lower than forecasted but expenses 6.8% lower than forecasted. The first of two semi-annual bond payments was made in February.

CITY OF ROWLETT, TEXAS
FINANCIAL STATUS DASHBOARD
May 31, 2014

OVERALL FUND PERFORMANCE

DEBT SERVICE FUND REVENUES VS EXPENSES FY2014

Month	2014 Revenue	2014 Expenses	Monthly Variance
Oct	$ 242,680	$ 13,921	$ 228,759
Nov	276,231	130,274	145,957
Dec	4,377,953	7,593	4,370,360
Jan	1,934,744	12,067	1,922,677
Feb	771,850	6,631,905	(5,860,055)
Mar	106,583	13,099	93,485
Apr	78,036	1,423	76,613
May	63,106	1,435	61,671
Jun			-
Jul			-
Aug			-
Sep			-
Total	$ 7,851,183	$ 6,811,717	$ 1,039,467
Cumulative Forecast	*$ 7,873,707*	*$ 6,778,801*	*$ 1,094,906*
Actual to Forecast $	*$ (22,523)*	*$ 32,916*	*$ (55,439)*
Actual to Forecast	*-0.3%*	*0.5%*	

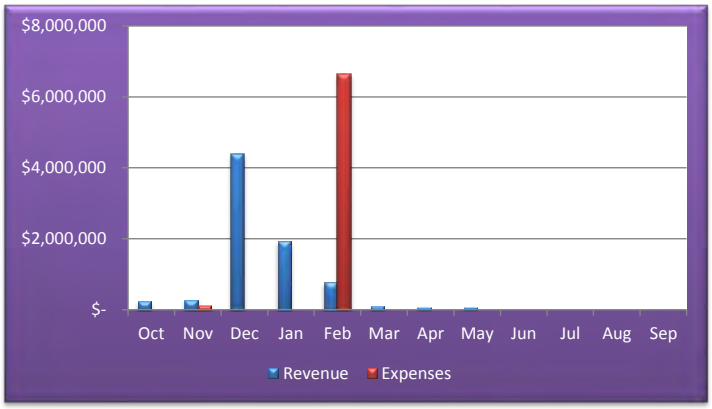

Positive

General Debt Service Fund is used to pay principal and interest on tax-supported debt. Overall, the fund is better than forecasted, with revenues 0.3% lower than projected, and expenses 0.5% higher than expected. The fund makes semi-annual debt payments in February and August.

OVERALL FUND PERFORMANCE

EMPLOYEE HEALTH BENEFITS FUND REVENUES VS EXPENSES FY2014

Month	2014 Revenue	2014 Expenses	Monthly Variance
Oct	$ 377,939	$ 348,484	$ 29,455
Nov	313,479	182,787	130,692
Dec	267,500	268,769	(1,269)
Jan	303,830	252,833	50,997
Feb	361,937	362,044	(107)
Mar	322,699	416,103	(93,403)
Apr	321,340	353,006	(31,666)
May	319,385	279,120	40,264
Jun			-
Jul			-
Aug			-
Sep			-
Total	$ 2,588,108	$ 2,463,146	$ 124,963
Cumulative Forecast	*$ 2,730,082*	*$ 2,713,398*	*$ 16,684*
Actual to Forecast $	*$ (141,974)*	*$ (250,252)*	*$ 108,279*
Actual to Forecast	*-5.2%*	*-9.2%*	

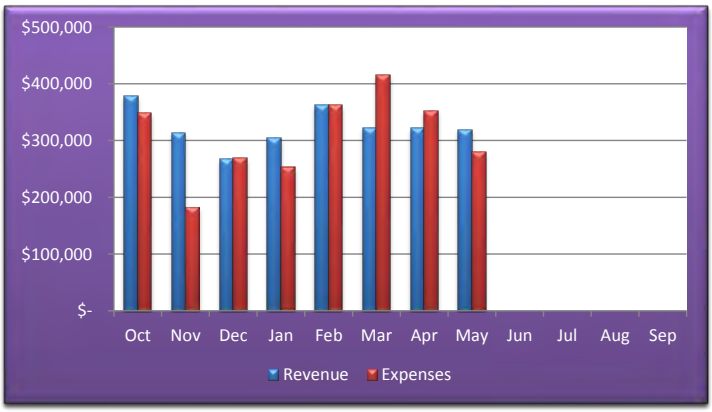

Positive

Employee Health Benefits Fund accounts for all health related claims paid from the City's partial self-insured fund. Overall, revenues are 5.2% lower than forecasted due to vacant positions (lower than expected employee contributions). Expenses are 9.2% lower than forecasted due to lower than expected claims.

City of Rowlett

Staff Report

4000 Main Street
P.O. Box 99
Rowlett, TX 75030-0099
www.rowlett.com

AGENDA DATE: 07/01/14 **AGENDA ITEM**: 5C

TITLE

Presentation of Texas Department of Transportation check to Keep Rowlett Beautiful.

STAFF REPRESENTATIVE

Jermel Stevenson, Parks and Recreation Director

SUMMARY

Keep Rowlett Beautiful (KRB) has received the Governor's Community Achievement Award in the amount of $250,000 for landscaping. The Governor's Community Achievement Awards program is one of the most prestigious annual environmental awards in Texas. This year, ten winning communities will share $2 million in landscape awards from the Texas Department of Transportation for their outstanding overall efforts to keep their communities beautiful. The awards recognize achievement in seven areas as follows:

- Community Leadership and Coordination
- Public Awareness
- Education
- Beautification and Community Improvement Litter Prevention and Cleanup
- Solid Waste Management
- Litter Law and Illegal Dumping Enforcement

BACKGROUND INFORMATION

KRB applied for the Governor's Community Achievement Award in early 2014. They competed against other state affiliated groups of Keep Texas beautiful in the category of cities with populations ranging from 40,001 to 65,000. The competition and amounts of the award are handled in the following manner:

Category by city population	Landscape Award
Up to 3,000	$90,000
3,001 to 5,500	$110,000
5,501 to 9,000	$130,000
9,001 to 15,000	$160,000
15,001 to 25,000	$180,000
25,001 to 40,000	$210,000
40,001 to 65,000	**$250,000**
65,001 to 90,000	$270,000
90,001 to 180,000	$290,000
180,000+	$310,000

Some of the other background information submitted to Keep Texas Beautiful that contributed to the award included the following:

- In 2013 KRB enjoyed a productive year of beautification projects, with a wide range of help from the community.
- The Parks and Recreation Department, Texas Trees Foundation, and KRB volunteers planted 130 trees in City parks, while a partnership with Schrade Middle School planted native and adaptive landscaping on school campuses.
- Litter reduction efforts in 2013 were a great success with a total of 337 volunteers comprised of citizens, businesses, and civic groups participating in various cleanups.
- KRB's Great American Cleanup and "Don't Mess with Texas" Trash Off with 295 volunteers collected 315 bags of trash.

On Monday June 23rd through Wednesday June 25th, Keep Texas Beautiful held its annual state conference in Austin. The award was presented to KRB during the conference. Since the time of notification of the award, KRB has worked with the City (i.e. Parks and Recreation, Public Works, Development Services) to identify locations in the City's landscaping to apply the funding. Specific locations of landscape projects will be determined in consultation between the Texas Department of Transportation and the City. Highway landscape projects will be designed, funded and contracted by the Texas Department of Transportation at approved sites on the existing state highway system. The Texas Department of Transportation must ensure that sites selected and activities performed are appropriate for expenditure of state highway funds and that designs are compatible with traffic operations. During the Keep Texas Beautiful Conference, KRB shared landscape design improvement concepts along Highway 66 from Rockwall to Garland with the Texas Department of Transportation.

FINANCIAL/BUDGET IMPLICATIONS

N/A

RECOMMENDED ACTION

This item is for information only.

City of Rowlett

Staff Report

4000 Main Street
P.O. Box 99
Rowlett, TX 75030-0099
www.rowlett.com

AGENDA DATE: 07/01/14 **AGENDA ITEM**: 5D

TITLE

Update from the City Council and Management: Financial Position, Major Projects, Operational Issues, Upcoming Dates of Interest and Items of Community Interest.

STAFF REPRESENTATIVE

Brian Funderburk, City Manager

City of Rowlett

Staff Report

4000 Main Street
P.O. Box 99
Rowlett, TX 75030-0099
www.rowlett.com

AGENDA DATE: 07/01/14 **AGENDA ITEM**: 7A

TITLE

Consider action to approve minutes from the June 17, 2014, City Council Meeting and the June 20-21, 2014, City Council Retreat.

STAFF REPRESENTATIVE

Laura Hallmark, City Secretary

SUMMARY

Section 551.021 of the Government Code provides as follows:

(a) A governmental body shall prepare and keep minutes or make a tape recording of each open meeting of the body.

(b) The minutes must:
   (1) state the subject of each deliberation; and
   (2) indicate each vote, order, decisions or other action taken.

BACKGROUND INFORMATION

N/A

DISCUSSION

N/A

FINANCIAL/BUDGET IMPLICATIONS

N/A

RECOMMENDED ACTION

Move to approve, amend or correct the minutes of the June 17, 2014, City Council Meeting and the June 20-21, 2014, City Council Retreat.

ATTACHMENTS

06-17-14 City Council Meeting minutes
06-19-14 and 06-20-14 City Council Retreat minutes

City of Rowlett

Meeting Minutes

City Council

4000 Main Street
Rowlett, TX 75088
www.rowlett.com

City of Rowlett City Council meetings are available to all persons regardless of disability. If you require special assistance, please contact the City Secretary at 972-412-6115 or write 4000 Main Street, Rowlett, Texas, 75088, at least 48 hours in advance of the meeting.

Tuesday, June 17, 2014 **6:15 P.M.** **Municipal Building – 4000 Main Street**

As authorized by Section 551.071 of the Texas Government Code, this meeting may be convened into closed Executive Session for the purpose of seeking confidential legal advice from the City Attorney on any agenda item herein.

The City of Rowlett reserves the right to reconvene, recess or realign the Regular Session or called Executive Session or order of business at any time prior to adjournment.

Present: **Mayor Gottel, Deputy Mayor Pro Tem Gallops, Councilmember Bobbitt, Councilmember Pankratz, Councilmember Sheffield, and Councilmember van Bloemendaal**

Absent: **Councilmember Dana-Bashian**

1. CALL TO ORDER

Mayor Gottel called the meeting to order at 6:15 p.m.

2. EXECUTIVE SESSION (6:15 P.M.)* Times listed are approximate

2A. The City Council shall convene into Executive Session pursuant to the Texas Government Code §551.071, Consultation with Attorney, to discuss and deliberate on legal issues pertaining to a lease agreement with American Golf for the Waterview Golf Course. (20 minutes)

Council convened in Executive Session at 6:15 p.m. Out at 6:51 p.m.

3. WORK SESSION (6:35 P.M.)*

3A. Update on North Texas Municipal water District (NTMWD) Stage 3 Water Restrictions (15 minutes).

Jim Proce, Assistant City Manager, provided the update. Council discussion regarding clarification of watering days and conservation rules.

3B. Discuss the Herfurth Park Concept Design options from la terra studio. (30 minutes)

This item was discussed after the Regular Session, beginning at 8:07 p.m.

Jermel Stevenson, Director of Parks and Recreation, along with Brad Moulton with la terra studio, presented the information. Several members of the Parks and Recreation Advisory Board and Keep Rowlett Beautiful were in attendance.

Mr. Moulton provided three concepts, which were presented to the Parks and Recreation Advisory Board. He also presented a preferred concept, which incorporated aspects from all three presentations as recommended by the Parks Board. He also discussed the next steps in the process, which include a possible connectivity with the private property to the east, which is yet to be developed.

Council discussion regarding the "playground" element, walkability, relocation of existing amenities such as the ball fields, tennis courts, and in-line hockey rink. Staff will incorporate Council's comments as they move forward. An updated presentation will be made to Council at a later date.

4. DISCUSS CONSENT AGENDA ITEMS

Council took a short break at 7:16 p.m.

CONVENE INTO THE COUNCIL CHAMBERS (7:30 P.M.)*

Council reconvened in Regular Session at 7:30 p.m.

INVOCATION – Deputy Mayor Pro Tem Gallops

PLEDGE OF ALLEGIANCE
TEXAS PLEDGE OF ALLEGIANCE – Led by the City Council

5. PRESENTATIONS AND PROCLAMATIONS

Prior to the presentations, Mrs. Brenda van Bloemendaal conducted the ceremonial Oath of Office for Councilmember Place 1, Robbert van Bloemendaal, who then made some personal remarks before taking his seat at the dais.

Councilmember Pankratz, along with Councilmember Bobbitt, was presented a check from the Alpha Nu Sorority in the amount of $2,000 for Kids Kingdom.

5A. Proclamations recognizing the 2014 Rowlett Arts and Humanities Commission's Writing Contest winners.

Councilmember Pankratz presented the proclamations to the winners along with Hugo Martinez of the Arts and Humanities Commissions, who presented the winners with a check.

5B. Update from the City Council and Management: Financial Position, Major Projects, Operational Issues, Upcoming Dates of Interest and Items of Community Interest.

Mayor Gottel announced the following: Upcoming City Council meetings: Council Retreat – Friday and Saturday, June 20th and 21st, 8am-5pm in the Annex Conference Room; Tuesday, July 1st and 15th; Regular Meeting - City Hall Conference Room; Tuesday, July 8th; Special Work Session. Upcoming Planning & Zoning Commission meetings will be Tuesday, July 8th and 22nd; 6pm in City Hall Conference Room. ROWLETT. MY COMMUNITY. MY MONEY. MY CHOICE. CAMPAIGN – Survey results are now posted on the website. KEEP ROWLETT BEAUTIFUL: Recognized by Keep Texas Beautiful (KTB) as one of 10 winners of the 2014 Governor's Community Achievement Award for outstanding community improvement. One of the most coveted annual environmental and community improvement honors in Texas. Winners will share $2 million in landscape funding from the Texas Department of Transportation. KRB will receive $250,000 for a landscaping project along SH 66. Rowlett will receive its award on Tuesday, June 24th in Austin, TX during the KTB 47th Annual Conference. See the article in the *Rowlett On the Move* June newsletter, page14. STAGE 3 WATER RESTRICTIONS – residents can water Once Every TWO Weeks. Upcoming events for Parks and Recreation: Fireworks on Main – Friday, July 4th, starts at 6pm. Wet Zone is open now! Check out the Parks & Recreation page on our website for hours of operation and more information. Upcoming events at the Rowlett Public Library: Summer Reading Program started June 9th and runs through August 1st. Check out everything going on at the Library this summer at Rowlett.com or the *Rowlett on the Move* newsletter. All City offices and facilities will be closed Friday, July 4th for Independence Day. Waste Management will run regular trash service that day.

6. CITIZENS' INPUT

There were no speakers.

7. CONSENT AGENDA

7A. Consider action to approve minutes from the June 3, 2014, City Council Meeting and the June 10, 2014, City Council Work Session.

This item was approved on the Consent Agenda.

7B. Consider a resolution authorizing the Mayor to sign utility easement documents associated with a previously approved Cell Tower to be constructed at Waterview Community Park (8500 St. Andrews Lane).

This item was approved as RES-050-14 on the Consent Agenda.

7C. Consider action to approve a resolution for the purchase of 2,951 water meters from Aqua Metric Sales Company in the amount of $431,903.72.

This item was approved as RES-051-14 on the Consent Agenda.

7D. Consider action to approve a resolution accepting the bid of and awarding a contract to Fryer Construction Company in the amount of $214,850 for the total base bid and a ten percent contingency in the amount of $21,485, resulting in a total project amount of $236,335, for the Martha Lane Tank Water Main Improvements Project and authorize the Mayor to execute the necessary documents for said services.

This item was approved as RES-052-14 on the Consent Agenda.

7E. Consider a tree mitigation plan and related tree removal permit application for more than three trees associated with the Four Square Addition for property located at 2817 Main Street. (DP14-705)

This item was approved as RES-053-14 on the Consent Agenda.

7F. Consider action to approve a resolution accepting the proposal and awarding a contract for the Integrated Library System to Biblionix, LLC in the amount of $68,250, including a five-year subscription for the Apollo hosted solution, and authorizing the City Manager to execute the necessary documents.

This item was approved as RES-054-14 on the Consent Agenda.

Passed The Consent Agenda

A motion was made by Deputy Mayor Pro Tem Gallops, seconded by Councilmember Pankratz, including all the preceding items marked as having been approved on the Consent Agenda. The motion carried with a unanimous vote of those members present.

8. ITEMS FOR INDIVIDUAL CONSIDERATION

8A. Consider action to approve a resolution appointing a Mayor Pro Tem as prescribed in the City Charter.

A motion was made by Councilmember Sheffield, seconded by Councilmember Bobbitt, to select Mr. Gallops as Mayor Pro Tem. The motion carried with five votes in favor (Pankratz, Sheffield, Bobbitt, Gottel, van Bloemendaal) and one abstention (Gallops). This item was adopted as RES-055-14.

8B. Consider action to approve a resolution appointing a Deputy Mayor Pro Tem as prescribed in the City Charter.

A motion was made by Mayor Pro Tem Gallops, seconded by Councilmember Sheffield, to select Mr. Pankratz as Deputy Mayor Pro Tem. The motion carried with a unanimous vote of those members present. This item was adopted as RES-056-14.

Council took a short break at 8:00 p.m. and reconvened in the Work Session to discuss item 3B.

TAKE ANY NECESSARY OR APPROPRIATE ACTION ON CLOSED/EXECUTIVE SESSION MATTERS

9. ADJOURNMENT

There being no further business, the meeting adjourned at 9:19 p.m.

City of Rowlett

Special Work Session Minutes

City Council Retreat

4000 Main Street
Rowlett, TX 75088
www.rowlett.com

City of Rowlett City Council meetings are available to all persons regardless of disability. If you require special assistance, please contact the City Secretary at 972-412-6115 or write 4000 Main Street, Rowlett, Texas, 75088, at least 48 hours in advance of the meeting.

Friday, June 20, 2014 **Saturday, June 21, 2014**	**8:00 A.M.**	**Annex Conference Room –** **4004 Main Street**

As authorized by Section 551.071 of the Texas Government Code, this meeting may be convened into closed Executive Session for the purpose of seeking confidential legal advice from the City Attorney on any agenda item herein.

The City of Rowlett reserves the right to reconvene, recess or realign the Regular Session or called Executive Session or order of business at any time prior to adjournment.

FRIDAY, JUNE 20, 2014:

Present: Mayor Gottel, Councilmember Dana-Bashian, Councilmember Sheffield, Councilmember van Bloemendaal, Deputy Mayor Pro Tem Pankratz, and Councilmember Bobbitt; City Manager – Brian Funderburk, Assistant City Manager – Jim Proce, City Secretary – Laura Hallmark, Director of Human Resources and Risk Management – John Murray

Absent: Mayor Pro Tem Gallops (arrived after lunch)

CALL TO ORDER

Mayor Gottel called the meeting to order at 8:15 a.m.

Welcome & Opening Remarks

Mayor Gottel welcomed everyone and stated he looks forward to this process every year and reviewed how important this retreat is in strategic planning.

Mr. Funderburk reviewed the agenda for the next two days.

Icebreaker Exercise

Mr. Murray conducted the icebreaker, which demonstrated that one problem or issue may have several options from where to begin and the differing opinions of the steps that are involved to solve it or finish it.

What do we want Rowlett to look like in the future?

Mr. Funderburk reviewed Realize Rowlett 2020 (RR2020) its process, guiding principles, and framework for the future, leading into the discussion of the vision for Rowlett and its future. Council discussion regarding Form Based Code and that process was very new ground for Rowlett and the naysayers who said “you can’t do that”.

Lengthy discussion regarding Rowlett’s lack of a “personality” – there is no destination for the City. As part of this discussion, Council brainstormed ideas for developing a “personality” and projects or events that would be attractions for current residents, future residents, developers, and the public in general. One item that was discussed at length was a music series for the downtown area.

The Council took a short break from 10:34 a.m. – 10:45 a.m.

Short-term Timeframe Discussion

Mr. Funderburk reviewed the various opportunities and threats presented to the City, including: economic development opportunities now that PGBT and DART are complete; RR2020 creates a positive vision and regulation plan for development; taxes paid per capita provides less resources for community services and amenities; similarity of value and housing structures; capacity for incentive-based development limited; and remaining proceeds from previously issued bonds depleting.

Council discussion regarding barriers to the opportunities that exist, including: failure of a bond package, tax rate increase, current tax rate, capacity to do the work under-staffing in Parks to maintain parkland at a high standard, and moving too slow or too fast with opportunities.

Lengthy discussion outlining items that Council would like to address over the next two years. The list of topics included: economic development strategies, infrastructure strategies, parks strategies, community strategies, and development/planning strategies.

The Council took a short break from 2:32 p.m. – 2:48 p.m.

General Obligation Bond Process

Mr. Proce reviewed the bond process including: What is this CIP, CIP benefits, process? What are Rowlett’s needs & challenges? Which stakeholders should we engage? How do we establish criteria? How will we engage out community? How do we leverage future freed up bond capacity? What is the timing for the bond election calendar? What are we going to do about our alleys?

Council discussed appointing an ad hoc committee for the bond process, with each Councilmember submitting names to Mr. Proce who will compile a list for Council’s approval at a later date.

Council discussion regarding alleys in the City – their condition, their repair and/or replacement, and how to fund them.

ADJOURNMENT

Mayor Gottel thanked everyone for their participation throughout the day and adjourned the meeting at 4:53 p.m.

SATURDAY, JUNE 21, 2014:

Present: Mayor Gottel, Mayor Pro Tem Gallops, Deputy Mayor Pro Tem Pankratz, Councilmember Dana-Bashian, Councilmember Bobbitt, Councilmember Sheffield, and Councilmember van Bloemendaal; City Manager – Brian Funderburk, Assistant City Manager – Jim Proce, City Secretary – Laura Hallmark, Chief Financial Officer – Alan Guard, Director of Human Resources and Risk Management – John Murray

CALL TO ORDER

Mayor Gottel called the meeting to order at 8:20 a.m. and reviewed Council's discussion from the previous day.

Mr. Funderburk reviewed the agenda and the goals for the day

Financial Challenges and Opportunities
Mr. Funderburk outlined some financial opportunities including: increase in tax value, freed up bond capacity, long-term liabilities from employee benefits; as well as some financial challenges, which include: FY2015 budget shortfall, employee turnover and compensation, and park maintenance and amenities.

Lengthy discussion of long-term employee liabilities of retiree health benefits and vacation/sick leave payout upon separation from the City.

The budget shortfall of approximately $900,000 was discussed along with the possibilities of coverage – reduction of services or possible tax increase.

The Council took a short break from 10:51 a.m. – 11:02 a.m.

Council discussed, at length, City tax exemptions, specifically relating to the senior tax exemption – it's effects on City revenue and the available options.

Current and projected water restrictions along with the effects on the budget were also discussed.

Employee Compensation and Benefits
Mr. Murray reviewed the compensation study and the results as related to the surveyed market cities, which outlined a majority of the positions earn significantly less than their peers. Council

discussed fixing the public safety step plan, which had been approved several years ago, but not funded.

The Council took a short break from 2:07p.m. – 2:15 p.m.

Mr. Funderburk reviewed the policy considerations as discussed by Council over the two day meeting. He and staff will take the direction as set by Council and submit for consideration at a later date.

ADJOURNMENT

Mr. Funderburk thanked everyone for their good discussion over the two days.

Mayor Gottel provided closing remarks and adjourned the meeting at 2:58 p.m.

City of Rowlett

Staff Report

4000 Main Street
P.O. Box 99
Rowlett, TX 75030-0099
www.rowlett.com

AGENDA DATE: 07/01/14 **AGENDA ITEM**: 7B

TITLE

Consider action to approve a resolution authorizing the final acceptance and release of retainage for the rehabilitation of Schrade Lift Station in the amount of $115,740.25 to Fuquay Incorporated and authorizing the Mayor to execute the necessary documents.

STAFF REPRESENTATIVE

Tim Rogers, Director of Public Works
Robbin Webber, Assistant Director of Public Works

SUMMARY

This project consists of the removal of existing piping with the installation of new equipment to include interior piping, gates, hatches, header pipe and connection to the existing force main. The concrete structure was rehabilitated with approved materials while monitoring a 24-hour bypass during construction.

BACKGROUND INFORMATION

Title 30 Texas Administrative Code (TAC) §213.5(c), states that lift stations must be designed and constructed to ensure that bypassing of any sewage does not occur. Fines and penalties may be issued by Texas Commission on Environmental Quality (TCEQ), should any effluent (sewage) be discharged into Lake Ray Hubbard. The construction of Schrade Lift Station was completed in 1994 and was installed to pump sanitary sewer flows coming from Lake Pointe Medical Center, Lakeside Village Estates Phases I & II subdivisions, and Dalrock Lift Station.

Schrade Lift Station is located approximately 150 feet from Lake Ray Hubbard. On February 18, 2013, a check valve failed (bolts rusted and came apart) and an overflow occurred. Due to the aged infrastructure, there was an increased risk of failure and the possibility of the overflow reaching Lake Ray Hubbard.

On August 6, 2013, the City Council adopted a resolution awarding the base bid to Fuquay, Incorporated in the amount of $727,180 for the rehabilitation of the Schrade Lift Station through the interlocal purchasing agreement with the Texas Local Government Purchasing Cooperative (BuyBoard) and authorized the Mayor to execute the Standard Public Works Construction Contract of said service.

DISCUSSION

Fuquay Incorporated has satisfactorily completed the project as designed in accordance with the contract plans and specifications and City staff has inspected the construction ensuring compliance with the provisions of the contract and recommends acceptance of such

improvements as the final payment amount is $47,802.50 and release of retainage of $67,937.75 for a total amount of $115,740.75.

FINANCIAL/BUDGET IMPLICATIONS

Funding in the amount of $115,740.25 has been encumbered in Project Code SS1160 account number 607-8201-531.80-02.

Budget Account Number and/or Project Code	Account or Project Title	Budgeted Amount	Proposed Amount
SS1160	607-8201-531.80-02	$727,180.00	**$115,740.25**
Total		**$727,180.00**	**$115,740.25**

RECOMMENDED ACTION

Staff recommends the City Council approve a resolution authorizing the final acceptance and release of retainage for the rehabilitation of Schrade Lift Station in the amount of $115,740.25 to Fuquay Incorporated and authorizing the Mayor to execute the necessary documents.

RESOLUTION

A RESOLUTION OF THE CITY COUNCIL OF THE CITY OF ROWLETT, TEXAS, AUTHORIZING FINAL ACCEPTANCE AND RELEASE OF RETAINAGE FOR THE REHABILITATION OF SCHRADE LIFT STATION IN THE AMOUNT OF $115,740.25 TO FUQUAY INCORPORATED; AUTHORIZING THE MAYOR TO EXECUTE THE NECESSARY DOCUMENTS FOR PAYMENT PURSUANT TO APPROVAL; AND PROVIDING AN EFFECTIVE DATE.

WHEREAS, the City Council adopted Resolution Number RES-066-13 awarding Bid # 2012-17 for the construction of Rehabilitation of Schrade Lift Station on August 6, 2013, in the amount of $727,180 to Fuquay Incorporated; and

WHEREAS, Fuquay Incorporated has completed the project within the construction timeframe and within budget; and

WHEREAS, City staff has inspected the construction ensuring that it complies with the provisions of the contract and recommends acceptance of such improvements as well as the release of retainage.

NOW THEREFORE BE IT RESOLVED BY THE CITY COUNCIL OF THE CITY OF ROWLETT, TEXAS:

Section 1: That the City Council of the City of Rowlett, Texas, hereby accepts the completion of the rehabilitation of Schrade Lift Station and approves the final payment and release of retainage to Fuquay Incorporated in the amount of $115,740.25.

Section 2: That the City Council of the City of Rowlett hereby authorizes the Mayor to execute the necessary documents for payment to conform to this resolution as appropriate.

Section 3: This resolution shall become effective immediately upon its passage.

ATTACHMENT

Exhibit A – Final Payment Request

EXHIBIT A

Rowlett
TEXAS

PAYMENT REQUEST (4.51)

PROJECT:	**Rehabilitation of Schrade Lift Station**	**PROJECT NUMBER**
OWNER:	**City of Rowlett, TX**	**2013-17**
CONTRACTOR:	**Fuquay, Inc.**	
ENGINEER:		

PAYMENT PERIOD FROM: 04/01/14 **TO** 04/30/14 **ESTIMATE NO.:** 5

SUMMARY OF PAYMENT ESTIMATE VALUES FROM ATTACHED TABULATIONS

Original Contract Amount	$727,180.00
Approved Change Orders	
Current Contract Amount	$727,180.00
Total Value of Original Contract Performed (Attachment "A" consisting of 1 page)	$727,180.00
Extra Work on Approved Change Orders (Attachment "B" consisting of 0 page)	
Materials on Hand (Attachment "C" consisting of __ pages)	
Total Value of Work to Date	$727,180.00
Less Amount Retained at _____ %	
Net Amount Earned on Contract	$727,180.00
Less Amount of Previous Payments	$611,439.75
BALANCE DUE THIS STATEMENT	$115,740.25
Percentage of Contract Paid to Date	100.00%

The undersigned Contractor certifies that all work, including materials on hand, covered by this Periodical Payment has been completed and delivered and stored in accordance with the Contract Documents, that all amounts have been paid by him for work, materials, and equipment for which previous Periodical Payments were issued and received from the Owner, and that the current payment shown herein is now due.

Contractor: Fuquay, Inc. By David M. Kaufel

Date: 5/2/14

Subscribed and sworn to before me this 2ND day of MAY 20 14

Notary Public: Rebecca S. Hernandez

My Commission expires: 1/2/17

NOTARY PUBLIC STATE OF TEXAS REBECCA S. HERNANDEZ My Commission Expires January 02, 2017

Recommended for Payment by

By _____ Date

Recommended for Payment by City of Rowlett Inspector

By _____ 2 June 2014 Date

Approved for Payment by CITY of ROWLETT

By _____ 06/03/14 Date

APPROVED BY
CITY OF ROWLETT

BY _____

Rowlett
TEXAS

ATTACHMENT "A"
PAYMENT REQUEST
TABULATION OF VALUES FOR ORIGINAL CONTRACT WORK PERFORMED

PROJECT: Rehabilitation of Schrade Lift Station
OWNER: City of Rowlett, TX
CONTRACTOR: Fuquay, Inc.
ENGINEER:

PROJECT NUMBER 2013-17

PAYMENT PERIOD FROM: 04/01/14 **TO** 04/30/14

ESTIMATE NO.: 5

ITEM NO.	DESCRIPTION OF ITEM	QUANTITY ORIGINAL ESTIMATE	UNIT OF MEASURE	UNIT PRICE	TOTAL CONTRACT AMOUNT	PREVIOUS QUANTITY	QUANTITY THIS ESTIMATE	VALUE OF WORK THIS ESTIMATE	BALANCE OF MATERIALS ON HAND	TOTAL VALUE OF WORK COMPLETED	% OF WORK COMPLETE
	Install Connection to Existing Force Main	1	LS	$ 40,260.00	$ 40,260.00	1.00				$40,260.00	100.00%
	Remove Interior Pumps, Piping, and Gates	1	LS	$ 39,220.00	$ 39,220.00	1.00				$39,220.00	100.00%
	Remove Header	1	LS	$ 42,270.00	$ 42,270.00	1.00				$42,270.00	100.00%
	Install Interior Piping, Gates (No Pumps or Electrical)	1	LS	$ 191,210.00	$ 191,210.00	0.75	0.25	$47,802.50		$191,210.00	100.00%
	Install New Header Pipe and Connect to Existing Force Main	1	LS	$ 33,170.00	$ 33,170.00	1.00				$33,170.00	100.00%
	Spraywall, 250 Mils	3880	SF	$ 22.00	$ 85,360.00	3,880.00				$85,360.00	100.00%
	Sandblast	3880	SF	$ 5.75	$ 22,310.00	3,880.00				$22,310.00	100.00%
	Extra Prep, Scaffolds, Etc.	5	DAY	$ 7,470.00	$ 37,350.00	5.00				$37,350.00	100.00%
	Cementitious, 1"	3880	SF	$ 14.00	$ 54,320.00	3,880.00				$54,320.00	100.00%
	Bypassing for Duration of Project	90	DAY	$ 2,019.00	$ 181,710.00	90.00				$181,710.00	100.00%
	TOTAL FOR PAGE / PROJECT				$727,180.00			$47,802.50		$727,180.00	100.00%

EXHIBIT A

Rowlett
TEXAS

ATTACHMENT "B"
PAYMENT REQUEST
TABULATION OF VALUES FOR APPROVED CHANGE ORDERS

PROJECT: Rehabilitation of Schrade Lift Station
OWNER: City of Rowlett
CONTRACTOR: Fuquay, Inc.
ENGINEER:

PROJECT NUMBER 2013-17

PAYMENT PERIOD FROM: 04/01/14 **TO** 4/30/2014 **ESTIMATE NO.:** 5

ITEM NO.	DESCRIPTION OF ITEM	QUANTITY ORIGINAL ESTIMATE	UNIT OF MEASURE	UNIT PRICE	CHANGE ORDER AMOUNT	PREVIOUS QUANTITY	QUANTITY THIS ESTIMATE	VALUE OF WORK COMPLETED THIS ESTIMATE	BALANCE OF MATERIALS ON HAND	TOTAL VALUE OF WORK COMPLETED	% OF WORK COMPLETE
	Additional MH & Coating										

EXHIBIT A

Rowlett
TEXAS

ATTACHMENT "C"
PAYMENT REQUEST
TABULATION OF VALUES FOR MATERIALS ON HAND

PROJECT: Rehabilitation of Schrade Lift Station
OWNER: City of Rowlett, TX
CONTRACTOR: Fuquay, Inc.
ENGINEER:

PROJECT NUMBER 2013-17

PAYMENT PERIOD FROM: 04/01/14 **TO** 04/30/14 **ESTIMATE NO.:** 5

ATTACHMENT "A" OR "B" ITEM NO.	TOTAL SCHEDULED VALUE	NAME OF SUPPLIER	INVOICE NO.	TOTAL INVOICE AMOUNT THIS ESTIMATE	TOTAL STORED MATERIAL AT LAST PAY ESTIMATE	AMOUNT INSTALLED THIS ESTIMATE	TOTAL INSTALLED TO DATE	BALANCE OF MATERIALS ON HAND
TOTAL FOR PAGE / PROJECT								

EXHIBIT A

EXHIBIT A
ATTACHMENT "D"
PROJECT SUMMARY

Rowlett TEXAS

PROJECT:	**Rehabilitation of Schrade Lift Station**	**PROJECT NUMBER**
OWNER:	**City of Rowlett, TX**	2013-17
CONTRACTOR:	**Fuquay, Inc.**	
ENGINEER:		

PAYMENT PERIOD FROM: 04/01/14 **TO** 04/30/14 **ESTIMATE NO.:** 5

CONTRACT TIME SUMMARY

Date of Notice to Proceed	2-Dec-13	
Original Contract Duration	90	
Original Date of Contract Substantial Completion	31-Jan-14	
Original Date of Contract Final Completion	2-Mar-14	
Approved Time Extensions		Days
Current Contract Duration	90	Days
Current Date of Contract Substantial Completion	31-Jan-14	
Current Date of Contract Final Completion	2-Mar-14	
Rain Out Days		Days
Days Charged to Project to Date	149	Days
Days Remaining in Contract	-59	Days
Percent of Current Project Duration	165.6%	
Current Scheduled Completion Date	2-Mar-14	
Project is (Ahead/Behind) Schedule	Behind	

CONTRACT COST SUMMARY

Original Contract Amount	$727,180.00
Approved Change Orders	
Current Contract Amount	$727,180.00
Contract Earnings to Date on Original Contract	$727,180.00
Earnings on Approve Change Orders	
Materials on Hand	
Total Current Project Amount Earned	$727,180.00
Percent of Contract Earned to Date	100.00%
Retainage	$72,718.00
Amount Paid to Date	$611,439.75
Percent of Contract Paid to Date	84.08%

City of Rowlett

Staff Report

4000 Main Street
P.O. Box 99
Rowlett, TX 75030-0099
www.rowlett.com

AGENDA DATE: 07/01/14 **AGENDA ITEM**: 8A

TITLE
Consider approving the listing of Councilmembers as liaisons to the various Boards and Commissions of the City along with regional entities through June, 2016.

STAFF REPRESENTATIVE
Laura Hallmark, City Secretary

SUMMARY
City Councilmembers serve as liaisons to the various Boards and Commissions of the City as well as regional entities. Each year, upon the completion of terms, Council reviews these appointments as necessary.

BACKGROUND INFORMATION
Each year, the City Council appoints its members to represent the City Council and City of Rowlett with the City's Boards and Commissions and various regional groups such as the Regional Transportation Council, North Texas Commission, NCTCOG Emergency Preparedness Council, Dallas Regional Chamber, Rockwall County Emergency Management Services and Metroplex Mayors Association.

DISCUSSION
Because of the change in Councilmembers, it is necessary to review the appointments and designate Councilmembers for the vacancies made.

FISCAL IMPACT
N/A

STAFF RECOMMENDATION
Consider approving the listing of appointments of Councilmembers through June 2016.

ATTACHMENT
Attachment 1 – List of boards, commissions and regional appointments

Positions for Appointment	Appointee
• Columnist – Dallas Morning News NeighborsGo	_____
• Member – Dallas Regional Chamber	_____
• Member – Dallas Regional Mobility Coalition	_____
• Attendee – Leadership North Texas	_____
• Attendee – Leadership Rowlett	_____
• Member – Metroplex Mayors Association	_____
• Member – North Texas Commission	_____
• Alternate – Regional Transportation Council (RTC)	_____
• Representative – Rockwall County EMS	_____
• Member – Rockwall County Planning Consortium	_____
• Representative – Rowlett Citizen Corps Council (RCCC) Board	_____
• Member – Rowlett Council Finance and Audit Committee (1)	_____
• Member – Rowlett Council Finance and Audit Committee (2)	_____
• Member – Rowlett Council Finance and Audit Committee (3)	_____
• Member – Rowlett Council Leadership Team (1)	_____
• Member – Rowlett Council Leadership Team (2)	_____
• Member – Rowlett Council Leadership Team (3)	_____
• Member/Vice Chair – Rowlett Economic Development Advisory Board	_____
• Member – Rowlett Economic Development Advisory Board	_____
• Chair – Rowlett Special Events Ad Hoc Committee	_____
• Moderator – RTN16 “Rowlett…on the Water…on the Move!”	_____
• Member/Chair – Rowlett TIF Board	_____
• Member – TEX-21 State Committee: Transportation Excellence for the 21st Century	_____
• Member – Realize Rowlett 2020 City Council Advisory Committee (1)	_____
• Member – Realize Rowlett 2020 City Council Advisory Committee (2)	_____
• Member – Realize Rowlett 2020 City Council Advisory Committee (3)	_____
• Member – Realize Rowlett 2020 Downtown Task Force	_____
• Member – North Central Texas Council of Governments Emergency Preparedness Council	_____
• Liaison – Animal Shelter Advisory Board	_____
• Liaison – Arts & Humanities Commission	_____
• Liaison – Board of Adjustment	_____
• Liaison – Golf Advisory Board	_____
• Liaison – Library Advisory Board	_____
• Liaison – Parks & Recreation Advisory Board	_____
• Liaison – Planning and Zoning Commission	_____
• Liaison – Senior Advisory Board	_____
• Liaison – Traffic & Safety Advisory Commission	_____

City of Rowlett

Staff Report

4000 Main Street
P.O. Box 99
Rowlett, TX 75030-0099
www.rowlett.com

AGENDA DATE: 07/01/14 **AGENDA ITEM**: 8B

TITLE

Consider action to approve a resolution amending the lease agreement with American Golf Corporation and restructuring the debt service for the Waterview Golf Course and authorizing the Mayor to execute the necessary documents, after approval of the City Attorney, for said contract.

STAFF REPRESENTATIVE

Brian Funderburk, City Manager

SUMMARY

American Golf Corporation has made a proposal to restructure the lease agreement for Waterview Golf Course. The purpose of this agenda item is to approve an amendment to the lease agreement.

BACKGROUND INFORMATION

On September 1, 1999, the City of Rowlett entered into a lease agreement for Waterview Golf Course with American Golf Corporation (AGC). Among other things, the lease calls for AGC to manage the golf course and provides for a schedule of rental payments. These payments were originally designed around the anticipated annual debt on the bonds issued to build the course and which contained an escalation over time. In June, AGC proposed to restructure the bonds at their cost. The proposal includes the complete defeasement of the 2010A bonds from a contribution of $1.19 million and the restructuring of the 1997A bonds from a contribution of $1.0 million that would reduce the total debt and extend the life of the 1997A bonds to 25-years. The defeasement of the 2010A bonds and the restructuring of the 1997A bonds would result in annual payments of approximately $250,000 per year and AGC has requested that their annual rental payment be reset to match the payment of the bonds.

The current lease represents a 30-year agreement beginning May 1, 2000, and ending December 31, 2030. The agreement provides for two additional five-year lease terms at option of Lessee. If exercised, the lease could be extended through the end of December 31, 2040.

DISCUSSION

As indicated previously, AGC has asked the City to consider restructuring the 1999 lease agreement. The terms of the proposal are as follows:

- AGC will invest $2.19M as follows:
  - $1.19M to completely defease the outstanding 2010A bonds.
  - $1.0M to buy down principal on 1997A bonds and restructure and extend the term for 25 years.

- City will modify rental income to match the new debt service schedule.
- AGC will exercise the option to extend agreement coterminous with new 25-year bond term. This will end their term on August 15, 2039.
- AGC will invest $75,000 to upgrade kitchen and appurtenances (i.e. tables, chairs, linens, etc). In addition, AGC will invest $139,618 to complete improvements to the clubhouse.
- AGC will set aside 3% of annual revenue into a CapEx fund for future improvements.

On May 20, 2014, City staff presented a recommended list of projects from the Golf Advisory Board as well as the funding strategy. This list totaled $830,448, which would be funded by a combination of contributions from the Waterview HOA, existing funds in the City's Golf Fund, and a three-year note for the remaining balance. Under AGC's proposal, alternate #1 from the clubhouse totaling $147,056 will be removed, the City's portion in upfront cash from the Golf Fund would increase by $172,682 and AGC would cover the balance of $139,618 with no financing necessary. In addition, the City will retain a reserve totaling $255,000, equivalent to one-year debt service. The table below outlines the major changes to the projects.

Projects	Description	Projected Cost as of 5-20-14	Projected Cost as of 7-1-14	$ Change
1	**Waterview Clubhouse Improvements**	$518,304	$518,304	$ -
-	**Remove alternate #1 – Dining Expansion**	-	(147,056)	(147,056)
1	**Revised Waterview Clubhouse Project**	$518,304	$371,248	$(147,056)
2	**Add lake(s) on Hole #2**	71,288	71,288	-
3	**Drainage on Hole #10**	46,175	46,175	-
4	**New Bunkers**	34,880	34,880	-
5	**Replace retaining wall on Hole #18 tee box**	150,801	150,801	-
6	**Add two tee boxes on Hole #6 and Hole #16**	9,000	9,000	-
	Total recommended expenditures	$830,448	$683,392	$(147,056)
	Contribution from Waterview HOA	(31,000)	(31,000)	-
	Net cost	$799,448	$652,392	$(147,056)
	Funded from Golf Fund	(340,092)	(512,774)	(172,682)
	Net shortfall – Original (City would finance over 3 years)	$459,356	**$139,618**	$(319,738)
	Net shortfall – Revised (American Golf covers the difference)	Balance covered by City	**Balance covered by AGC**	n/a
City retains a reserve of $255,000, equivalent to one-year debt service based on the debt restructuring.				

The current and proposed annual debt service payment schedule is listed in the table below. Even with the extension of the 1997A bonds to 25-years, total debt will be reduced by $728,573 due to the $2.19 million contribution from AGC.

Debt Service Projections - Current vs AGC Proposal

Fiscal Year	Current (1)	AGC Proposal (2)	Change
2015	$396,430	$254,559	($141,871)
2016	444,402	253,830	(190,572)
2017	501,305	252,990	(248,315)
2018	541,306	251,541	(289,765)
2019	569,265	254,556	(314,709)
2020	588,241	252,092	(336,149)
2021	603,600	253,352	(350,248)
2022	613,842	254,442	(359,400)
2023	622,798	250,362	(372,436)
2024	641,921	251,282	(390,639)
2025	656,540	252,032	(404,508)
2026	669,643	251,572	(418,071)
2027	94,993	250,902	155,909
2028	95,139	250,022	154,883
29-39	-	2,777,318	2,777,318
Total	$7,039,425	$6,310,852	($728,573)

Note: Current principal balance for the taxable 1997A Variable Rate Bond is $4,910,000. It will be $4,665,000 after FY2014.

(1) Includes the current debt structure for the 2010A Bonds and the 1997A Variable Rate Bonds assuming 12M LIBOR Forward Rates.

(2) Proposed debt structure assuming 2010A Bonds are defeased and the 1997A Bonds are restructured.

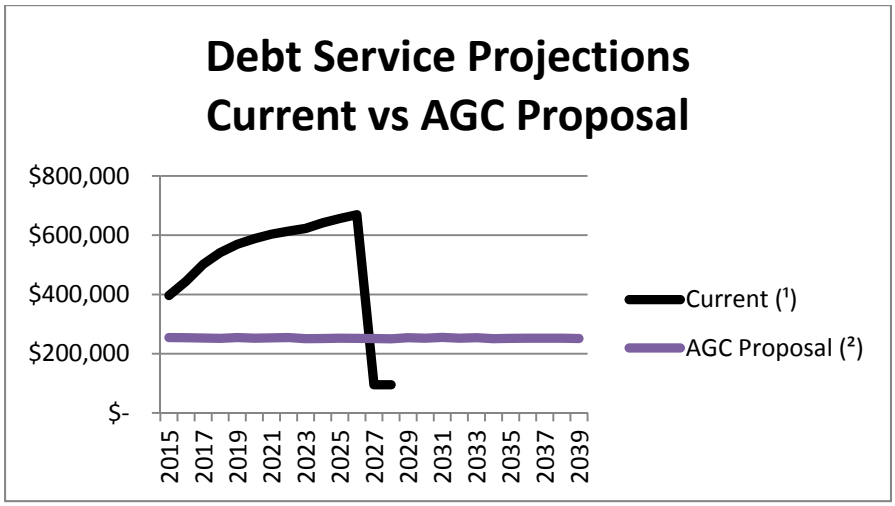

What does each party get out of this deal?

City of Rowlett	American Golf Corporation
• Adds certainty that the lease agreement will continue beyond the initial 30 years (i.e. 9 more years). • Overall annual debt service is reduced to about $250k and the risk of variability from the 1997A bonds, which are currently tied to the 12-month LIBOR rate is eliminated. • Total debt is reduced by about $728k. • The City does not have to finance the clubhouse improvements, which would have cost about $480,000 with interest. • AGC will fund a cap-ex fund for future improvements that will be based on 3% of total revenue.	• Reduces the overall fixed rent and eliminates the built-in escalator, thereby providing future stability. • Reduces overall cost of operations by $6.0 million thereby providing future profitability. • Clubhouse improvements will improve ability to schedule larger tournaments and non-golf events such as weddings and receptions, which is expected to generate additional revenue.

There is one factor that the City of Rowlett specifically gives up. Because the current 1997A bonds are tied to the 12-month LIBOR rate, which are at historically low levels, the City does give up the ability to fund future improvements if rates remain low.

For example, in the chart below, you can see that the LIBOR rate is expected to climb sharply in the coming years. As a result, there is about $500,000 difference between the rental payments from AGC and the debt service to be paid over the next three years. Further out in the future, that gap narrows, but the $500,000 is a very real amount that the City gives up. On the other hand, by modifying the improvements to the clubhouse and increasing the cash commitment from both the City and AGC, the City will not need to finance the improvements over the three years originally anticipated, yet the bulk of the improvements at the golf course will still be made.

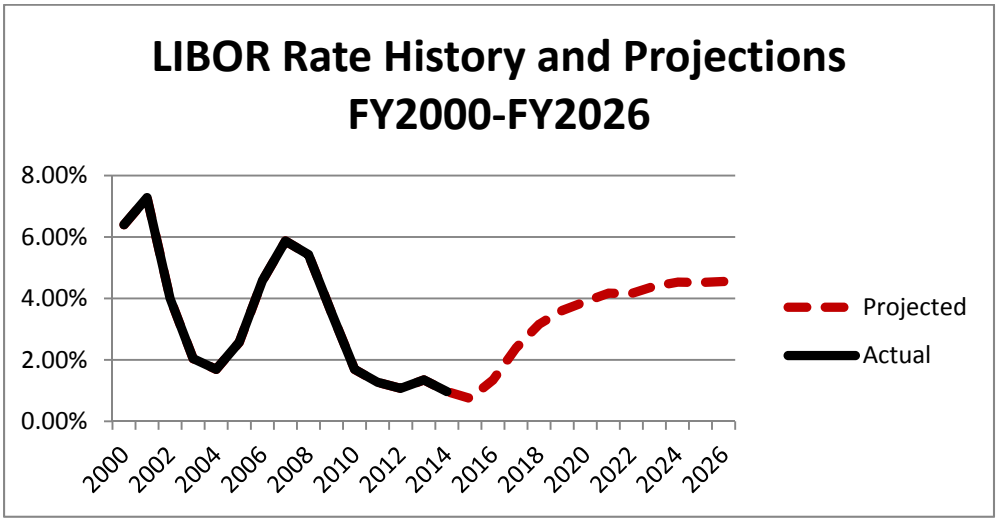

FINANCIAL/BUDGET IMPLICATIONS

The City will be required to defease the 2010A bonds and refinance the 1997A bonds based on the $2.19 million in contributions from American Golf. The overall annual debt service will drop to a range of $250,000-$255,000.

In addition, the City will increase its cash contribution to the clubhouse and other golf course improvements from $340,092 to $512,774, an increase of $172,682; however, the City will not need to finance the bulk of the project, which would have cost a total of $480,000 over three years.

Finally, the City's existing reserve of $427,682, which represents one year of debt service on the current schedule will decrease to $255,000, which represents one year of debt service on the new schedule.

RECOMMENDED ACTION

Staff recommends Council approve a resolution amending the lease agreement with American Golf Corporation.

RESOLUTION

A RESOLUTION OF THE CITY COUNCIL OF THE CITY OF ROWLETT, TEXAS, APPROVING AN AMENDMENT TO THE LEASE AGREEMENT WITH AMERICAN GOLF CORPORATION AND AUTHORIZING THE MAYOR TO EXECUTE THE NECESSARY DOCUMENTS, AFTER CITY ATTORNEY APPROVAL, FOR SAID CONTRACT; AND PROVIDING AN EFFECTIVE DATE.

WHEREAS, on September 1, 1999, the City of Rowlett entered into a lease agreement with American Golf Corporation to operate and manage the Waterview Golf Club; and

WHEREAS, American Golf Corporation has proposed a restructuring of the lease agreement to revise the rental payments and other matters described in Amendment Number Two (Exhibit A); and

WHEREAS, American Golf Corporation is providing funds for the restructuring of the debt owed on the golf course, which will result in reducing the total debt.

NOW THEREFORE BE IT RESOLVED BY THE CITY COUNCIL OF THE CITY OF ROWLETT, TEXAS:

Section 1: That the City Council of the City of Rowlett does hereby approve Amendment Number Two to the Lease Agreement with American Golf Corporation for the lease, management and operation of the Waterview Golf Course, as shown in Exhibit A, attached hereto and incorporated herein.

Section 2: That the Mayor be and is hereby authorized to sign the Amendment on the City's behalf.

Section 3: That this resolution shall become effective immediately upon its passage.

ATTACHMENT

Exhibit A – Amendment Number Two

SECOND AMENDMENT TO LEASE
(Waterview Golf Club)

1. **Identification and Parties**. This Second Amendment To Lease (this "Amendment") is dated for identification purposes only as of July 1, 2014, and is entered into by and between City of Rowlett, Texas, a municipal corporation ("Lessor") and American Golf Corporation, a California corporation ("Lessee").

2. **Recitals**.

a. Lessor and Lessee are parties to that certain Lease dated September 1, 1999 (the "Original Lease") covering the real property commonly known as Waterview Golf Course located in Waterview, Texas, and certain other real property more particularly described in the Lease. The Original Lease was amended by that certain First Amendment of Lease and Amendment of Maturation Consulting Agreement dated as of December 21, 1999 (the "First Amendment," which together with the Original Lease is referred to herein as the "Lease"). All capitalized terms used herein and not otherwise defined shall have the same meaning given to them in the Lease.

b. Lessor and Lessee desire to further amend the Lease, among other things, to provide for the exercise of Lessee's Lease term renewal options pursuant to Section 4.2 of the Original Lease as more particularly provided for below.

NOW THEREFORE, in consideration of the foregoing recitals, the mutual covenants contained in this Amendment and for other good and valuable consideration, the receipt and sufficiency of which are hereby acknowledged, Lessor and Lessee hereby agree as set for the below.

3. **Amendment**.

a. Reduction of Bond Debt. On or prior to July 7, 2014, Lessee shall deposit the sum of Two Million One Hundred Ninety Thousand Dollars ($2,190,000) (the "Lessee Contribution Amount") into an escrow account (the "Escrow") mutually selected by Lessor and Lessee with express instructions that it may only be used as follows:

i. One Million Dollars ($1,000,000) of the Lessee Contribution Amount shall only be released as directed by Lessee for the purposes of reducing the principal balance of the existing debt on the Series 1997A Bonds. Lessor shall refinance the remaining $4,910,000 principal balance of the Series 1997A Bonds with a new twenty five (25) year term General Obligation Refunding Bonds, Taxable Series 2014, commencing on February 15, 2015 and maturing on August 15, 2039 (the "Refinancing Transaction").

ii. One Million One Hundred Ninety Dollars ($1,190,000) of the Lessee Contribution Amount shall only be released as directed by Lessee for the purposes of defeasing the Series 2010A Bonds (the "Defeasance Transaction"). The Series 2010A Bonds replaced and superseded the Series 1999B New Money Bonds referenced in Section 6.1(b) of the Original Lease.

The date on which the Refinancing Transaction and the Defeasance Transaction close shall be referred to herein as the "Closing Date." The Closing Date is anticipated to occur on August 14, 2014. If the Closing Date does not occur on or prior to August 31, 2014, the Escrow shall be instructed to immediately return the Lessee Contribution Amount to Lessee. The Lessee Contribution Amount shall only be used and released pursuant to the terms set forth above and for no other purpose unless expressly permitted by Lessee in writing.

b. Exercise of Lease Term Options. On the Closing Date, Lessee shall be deemed to have exercised both of its options to extend the Lease term under Section 4.2 of the Original Lease; provided, however, that in lieu of extending the Lease term for two (2) successive five (5) year periods as set forth in Section 4.2, the Lease term shall be extended for a total of nine (9) consecutive years following the currently scheduled expiration date of December 31, 2030. The new expiration date shall be December 31, 2039 (the "New Expiration Date"). Lessee shall have no further options to extend the Lease term.

c. New Fixed Minimum Rent. Commencing as of February 2015 and until the New Expiration Date, the Fixed Minimum Rent payable by Lessee shall be equal to the payments set forth in on the Revised Schedule 6.1(a) attached hereto and incorporated herein by this reference. From and after the Closing Date, Sections 6.1(b) through 6.1(d), inclusive, are hereby deleted.

d. Debt Deficit. Effective as of the Closing Date, Section 6.6 of the Original Lease, Section 4.1 of the First Amendment and all other references in the Lease to the Debt Deficit shall be deleted.

e. Base Line NOI. Following the Closing Date, the term "Base Line NOI" shall mean the Base Line NOI for Lease Year 2014 under the Lease (as adjusted by CPI as set forth in the Lease) and, thereafter through the New Expiration Date, the Base Line NOI shall continue to increase (if at all) from the Base Line NOI for the previous Lease Year by the percentage increase in the CPI in the twelve (12) month period ending on the last day of October in the immediately preceding Lease Year; provided, however, that in no event shall the Base Line NOI be reduced by reason of such computation.

f. Lessee's Upgrade Investment. Following the Closing Date, Lessee shall spend up to Seventy Five Thousand Dollars ($75,000) to perform work to upgrade the kitchen located within the clubhouse and purchase additional furniture, fixtures and equipment (e.g., tables, chairs, linens, flatware, etc.) for the purpose of hosting events as deemed necessary by Lessee, in its reasonable discretion. The kitchen upgrade work will be performed and completed in a good workman like manner.

g. Lessee's Clubhouse Investment. Following the Closing Date, Lessor and Lessee shall participate in the improvements to the Waterview Clubhouse, as designed by McCarthy Architects, excluding the expansion of the dining area, otherwise known as Alternate One, and that otherwise includes the basic design and all other alternates. Lessor shall contribute Two Hundred Thirty One Thousand Six Hundred Thirty Dollars ($231,630) and Lessee shall contribute One Hundred Thirty Nine Thousand Six Hundred and Eighteen Dollars ($139,618), for a total of Three Hundred Seventy One Thousand Two Hundred and Forty Eight Dollars ($371,248) to complete the project. If the final cost of the project differs from the total due to upgrades or

additional work, the party requesting the upgrade or additional work shall pay the additional cost. If the final cost is less than the total contribution of both parties, the difference shall be divided by the parties proportionately in accordance with the percentage that each party's contribution bears to the total. If additional costs are incurred that are not attributable to upgrades or additional work, Lessee shall bear those additional costs.

h. Capital Improvements Reserve. From and after January 1, 2019, the first sentence of Section 13.3 of the Original Lease shall be revised to read as follows: "In each Lease Year, Lessee shall credit in a capital improvement reserve fund ledger three percent (3%) of Gross Revenue for such Lease Year".

4. **Condition Precedent**. Notwithstanding anything herein to the contrary, the terms and conditions set forth in Sections 3(b) through 3(g) above are expressly conditioned upon the closing of both the Refinancing Transaction and the Defeasance Transaction. If the Closing Date does not occur on or before August 31, 2014, this Amendment and the terms and conditions set forth herein shall automatically become null and void, and of no further force or effect.

5. **Miscellaneous**.

a. No Other Changes. Except as expressly amended by this Amendment, the Lease remains unchanged and shall continue in full force and effect.

b. Counterparts and Facsimile. This Amendment may be executed in any number of counterparts, each of which shall be deemed an original and all of which, together, shall constitute one instrument. Any party may transmit its signature to this Amendment by facsimile, and such facsimile signature page shall be deemed an original ink signature for all purposes.

[Signature Page Follows Immediately]

IN WITNESS WHEREOF, Lessor and Lessee have entered into this Amendment as of the date first set forth above.

"Lessor"

CITY OF ROWLETT,
a Municipal corporation

By:_____
Printed Name:_____
Title:_____

"Lessee"

AMERICAN GOLF CORPORATION,
a California corporation

By:_____
Printed Name:_____
Title:_____

Revised Schedule 6.1(a)

LEASE YEAR	FIXED MINIMUM RENT
2015	$254,559.00
2016	$253,830.00
2017	$252,990.00
2018	$251,541.00
2019	$254,556.00
2020	$252,092.00
2021	$253,352.00
2022	$254,442.00
2023	$250,362.00
2024	$251,282.00
2025	$252,032.00
2026	$251,572.00
2027	$250,902.00
2028	$250,022.00
2029	$253,932.00
2030	$252,422.00
2031	$254,998.00
2032	$252,110.00
2033	$253,990.00
2034	$250,406.00
2035	$251,590.00
2036	$252,210.00

2037	$252,361.00
2038	$252,043.00
2039	$251,256.00

City of Rowlett

Staff Report

4000 Main Street
P.O. Box 99
Rowlett, TX 75030-0099
www.rowlett.com

AGENDA DATE: 07/01/14 **AGENDA ITEM**: 8C

TITLE

Conduct a public hearing and take action on a request to amend Planned Development Ordinance #070-07 to allow additional parking at the Andrews office building located at 1900 Dalrock Road. (PD14-718)

STAFF REPRESENTATIVE

Garrett Langford, Principal Planner

SUMMARY

The applicant is requesting to amend Planned Development (PD) Ordinance #070-07 to allow six additional parking spaces at 1900 Dalrock Road (Attachment 1 – Location Map and Attachment 2 – PD Ordinance #070-07). The applicant would like to remove two landscaped parking islands to add six additional parking spaces.

The Planning and Zoning Commission voted unanimously to recommend approval of this item at their June 24, 2014, meeting.

BACKGROUND INFORMATION

The Andrews Addition was developed in 2008 with a three-story office building totaling in 20,690 square feet. The property was developed by KE Andrews, which continues to occupy the building. KE Andrews is a tax and valuation company that specializes in the energy sector. The company has grown from 15 employees from its inception to currently 75 employees. When the site was developed, the company expected to have 65 employees. The success of the company and increased number of employees has resulted in parking shortages for the company. To alleviate the parking shortage, the applicant wishes to add six more parking spaces by removing two landscaped parking islands that are required under the existing PD Ordinance #070-70 and by the Rowlett Development Code (RDC).

The subject property is 1.348 acres in size and is bordered by the railroad to the south, the Take-Line Area to the east and northeast, and Dalrock Road to the west. The surroundings do not provide an opportunity to allow the applicant to acquire additional land to provide more parking. The subject property was first rezoned for a PD in 2005 to allow for the office building. The original concept plan for the development included leasing and using the adjacent take-line area for parking. However, the applicant could not come to an agreement with the City of Dallas in regard to the Take-Line Area. As a result, the applicant amended the PD in 2007 and redesigned the site plan to eliminate any construction within the Take-Line Area property.

The 2007 PD states “parking rows of up to fourteen (14) continuous spaces shall be allowed along the Dallas take-line and along the south property line.” The PD does not dictate an allowance for continuous parking along Dalrock Road. Therefore, the maximum allowed number of continuous parking along Dalrock Road would be dictated by the current requirements in the Rowlett Development Code, which allows up to 12 continuous parking spaces without a landscaped island.

Currently, the site has 70 parking spaces. The applicant is proposing to add six more parking spaces. This will impact two landscaped islands. The eastern landscaped island is located along the Take-Line Area between a row of 13 parking spaces and a row of 14 parking spaces. The western landscaped island is located along Dalrock Road between a row of eight parking spaces and a row of 10 parking spaces. (Attachment 3 – Site Photos)

The eastern landscaped island will be reduced in size to provide four additional parking spaces. This will increase the number of continuous parking spaces to the north of the eastern landscaped island from 14 to 18. There will remain a small pie-shaped landscaped island between the two rows of parking along the take-line area. The eastern landscape island had three existing pecan trees that were preserved as part of the 2008 approved tree mitigation plan. However, the applicant indicated that the trees eventually died and were removed. The western landscaped island is approximately 1,130 square feet in size. Adding the parking spaces will reduce this landscaped island to 120 square feet in size.

The western landscaped island will be removed to add two additional parking spaces. This will create a continuous row of 20 parking spaces along Dalrock Road. The western landscaped island is approximately 287 square feet in size and includes a Chinquapin Oak tree that will need to be replaced, if the request is approved.

Removing the landscaped islands will result in a reduction of the total landscaped area for the subject property from 20,828 square feet to 19,531 square feet of landscaping, or a decrease from 33 percent to 31 percent total landscaping of the subject property. The reduced landscaped area will continue to exceed well above the minimum 15 percent of overall landscape of the subject property.

The proposed amendment would modify the standard #1 under Landscaping in Exhibit C of the PD Ordinance #070-07 as follows:

Current Requirement:
“The landscaping for this area will comply with the landscape requirements within the Rowlett Development Code, as amended herein. Parking rows of up to fourteen (14) continuous spaces shall be allowed along the Dallas take-line and along the south property line. The 5 feet required parking lot perimeter buffer will not be provided due to existing undisturbed landscape within the take-line area and to the east between the south parking lot and the railroad.”

Proposed Language (bolded and underlined):
"The landscaping for this area will comply with the landscape requirements within the Rowlett Development Code, as amended herein. **Parking rows of up to eighteen (18) continuous spaces shall be allowed along the Dallas take-line and along the south property line. Parking rows of up to twenty (20) parking spaces shall be allowed along the west property long.** The 5 feet required parking lot perimeter buffer will not be provided due to existing undisturbed landscape within the take-line area and to the east between the south parking lot and the railroad."

The proposed changes to the Concept Plan in PD Ordinance #070-07 are illustrated in Attachment 4 – Revised Concept Plan.

DISCUSSION

Section 77-805 of the *Rowlett Development Code (RDC)* states that the Planning and Zoning Commission shall consider the following when making their recommendation to the City Council as it pertains to rezoning requests including Planned Developments. These criteria are listed below:

1. Whether the proposed rezoning corrects an error or meets the challenge of some changing condition, trend, or fact;

   The proposed amendment to the Planned Development Ordinance #070-07 is needed to address the changing conditions with the operation of the property. Over the last several years, KE Andrews has increased the number of employees to 75. As a result, the subject property is beginning to experience parking shortages. This increase in the number of employees without expanding the square-footage of the building is reflective of an overarching trend seen in office environments where less space (square-footage) is needed per employee. This higher utilization rate of office space leads to higher parking demands. The amendment to the PD will allow the applicant to expand the parking to meet an increased demand of a growing business.

2. Whether the proposed rezoning is consistent with the comprehensive plan and the purposes of this code stated in subchapter 77-103, Purpose of this Code;

   The subject property is not located within one of the 13 opportunity areas in the Realize Rowlett 2020 Comprehensive Plan. The Plan states for areas outside of the opportunity areas that the existing zoning and the Guiding Principles should be considered in decisions about rezoning and site design. This proposal meets Guiding Principle #2, "Grow the City's economy through diversification of job and business opportunities." Allowing additional parking for a company that continues to provide for professional employment opportunities within the City, meets the intent of the Plan.

3. Whether the proposed rezoning will protect or enhance the health, safety, morals, or general welfare of the public;

The proposed amendment to the PD is not expected to negatively impact the health, safety, morals, or general welfare of the public. The proposed amendment is minor in scope. Removing the landscaped island will allow an increase of six parking spaces or an increase of 9 percent.

The RDC sets a maximum on the amount of parking that can be provided for commercial uses including off use. The RDC requires the number of off-street vehicle parking spaces shall not be provided in an amount that is more than 125 percent of the minimum requirements. The PD establishes a minimum parking of one space per 310 square feet. This results in requiring a minimum of 67 parking spaces and a maximum of 84 parking spaces for this development. Increasing the number of parking spaces from 70 to 76 will not exceed the 125 percent maximum parking threshold.

The increase in the number of parking spaces is not expected to adversely impact the traffic along Dalrock Road. The driveway to the parking lot where the parking spaces will be added has a traffic-light signal to control the exiting traffic out of the parking lot.

4. Whether the municipality and other service providers will be able to provide sufficient transportation and utility facilities and services to the subject property, while maintaining sufficient levels of service to existing development;

Adequate utilities, access roads, and drainage facilities exist for the subject property and are sufficient for accommodating the demands associated with the request for additional parking.

5. Whether the proposed rezoning is likely to have significant adverse impacts on the natural environment, including air, water, noise, stormwater management, wildlife, and vegetation;

It is unlikely that the proposed amendment to the PD to allow additional parking will have significant adverse impacts on the natural environment. The Development Services Engineer has reviewed the proposal and concluded that the additional pavement will not adversely impact the stormwater runoff.

6. Whether the proposed rezoning will have significant adverse impacts on other property in the vicinity of the subject tract;

Increasing the number of parking spaces by removing the existing landscaped parking islands is not expected to have any significant adverse impacts on other property in the vicinity of the subject property. The ROW landscape buffer along

Dalrock Road provides ample screening of the parking lot from Dalrock Road. It is not expected for the increased number of parking spaces along Dalrock Road to negatively affect nearby properties.

7. The suitability of the subject property for the existing zoning classification and proposed zoning classification;

   The proposed PD amendment does not change the zoning classification. The permitted use of the property will remain and continue to be suitable for the subject property.

8. Whether there is determined to be an excessive proliferation of the use or similar uses;

   The proposed PD amendment does not involve a change in allowable uses of the subject property. This criterion is not applicable to this request.

9. Whether the proposed rezoning will ensure that future uses on the subject tract will be compatible in scale with uses on other properties in the vicinity of the subject tract; and;

   The use of the property will not change as a result of the proposed PD amendment. The development will continue to be compatible in scale with uses on other properties in the vicinity of the subject property.

10. The supply of land in the economically relevant area that is in the use district to be applied by the rezoning or in similar use districts, in relation to the demand for that land.

    The proposed PD amendment to revise the development standards to allow for additional parking for an office use will not impact the supply of land. This criterion is not applicable to this request.

In summary, the proposed amendment to the PD to allow a minor increase in the number of the parking spaces will not have an adverse impact on adjacent properties. The subject property is limited in size and shape thereby limiting the ability to add more parking spaces under the current requirements of the PD. The proposed PD amendment meets the before mentioned criteria for a rezoning and is consistent with the Realize Rowlett 2020 Comprehensive Plan. The proposed revisions to the PD are shown Exhibit B – Revised Concept Plan and as amended in Section 3 of the proposed ordinance.

<u>Public Notice</u>

On May 23, 2014, a total of 14 notices were sent to property owners within 200 feet. As of Wednesday, June 25, 2014, one response was received in favor of the request and two were received in opposition.

A Legal Notice was published in the *Rowlett Lakeshore Times* on June 12, 2014, pursuant to the requirements set forth in the Rowlett Development Code. A zoning sign was placed on the subject property on June 13, 2014, in accordance with the Rowlett Development Code and remains on the site today.

FISCAL IMPACT/BUDGET IMPLICATIONS

N/A

RECOMMENDED ACTION

Staff recommends approval of the request to amend PD Ordinance #070-07.

ORDINANCE

AN ORDINANCE OF THE CITY OF ROWLETT, TEXAS, AMENDING ORDINANCE NO. ORD-070-07, ADOPTED ON OR ABOUT NOVEMBER 6, 2007, TO AMEND THE PARKING REQUIREMENTS RELATING TO THE PLANNED DEVELOPMENT STANDARDS APPLICABLE TO A PLANNED DEVELOPMENT (PD) OFFICE DISTRICT FOR 1.51 +/- ACRES OF LAND LOCATED ON THE EAST SIDE OF DALROCK ROAD, 850 +/- FEET NORTH OF THE WESTBOUND FRONTAGE ROAD OF INTERSTATE HIGHWAY 30, IN THE CITY OF ROWLETT, ROCKWALL COUNTY, TEXAS; PROVIDING A REPEALING CLAUSE; PROVIDING A SAVINGS CLAUSE; PROVIDING A SEVERABILITY CLAUSE; PROVIDING A PENALTY OF FINE NOT TO EXCEED THE SUM OF TWO THOUSAND DOLLARS ($2,000.00) FOR EACH OFFENSE; AND PROVIDING AN EFFECTIVE DATE.

WHEREAS, the City Council of the City of Rowlett, Texas, in compliance with state laws with reference to amending the Comprehensive Zoning Ordinance, adopted Ordinance No. ORD-070-07, on or about November 6, 2007, granting Planned Development Office District Zoning for 1.51 +/-acres of land situated generally on the east side of Dalrock Road approximately 850 feet north of the westbound frontage road of Interstate Highway 30; and

WHEREAS, Ordinance No. ORD-070-07 adopts and establishes general planned development standards applicable to office district development of the subject property; and

WHEREAS, a request has been submitted for an amendment to the Planned Development regulations adopted by Ordinance No. ORD-070-007, seeking relief from the parking requirements of the regulations; and

WHEREAS, the Planning and Zoning Commission of the City of Rowlett and the governing body of the City of Rowlett, in compliance with state laws with reference to amending the Comprehensive Zoning Ordinance, have given the requisite notice by publication and otherwise, and after holding due hearings and affording a full and fair hearing to all property owners generally, the governing body of the City of Rowlett is of the opinion that said zoning ordinance should be amended as provided herein.

NOW THEREFORE, BE IT ORDAINED BY THE CITY COUNCIL OF THE CITY OF ROWLETT, TEXAS:

Section 1. That Ordinance No. ORD-070-07, duly adopted by the City Council of the City of Rowlett, Texas, on or about November 6, 2007, be and is hereby amended to amend the Planned Development regulations and concept site plan incorporated in said ordinance applicable to property described as being 1.51 +/-acres of land situated generally on the east side of Dalrock Road approximately 850 feet north of the westbound frontage road of Interstate Highway 30 and being more particularly described in Exhibit "A", attached hereto and by this reference incorporated herein (hereinafter, the "Property").

Section 2. That Exhibit "B" of Ordinance No. ORD-070-07, be and is hereby amended to revise the concept site plan in said ordinance and to replace said concept site plan with the concept site plan marked as Exhibit "B," attached hereto and incorporated herein.

Section 3. That Exhibit "C" of Ordinance No. ORD-070-07, labeled therein as the Development Regulations, be and is hereby amended by amending paragraph 1 of said Development Regulations under the heading Landscaping," to repeal all of paragraph 1 and to replace said paragraph with the following provision:

"**LANDSCAPING**

1. The landscaping for this area will comply with the landscape requirements within the Rowlett Development Code, as amended herein. Parking rows of up to eighteen (18) continuous spaces shall be allowed along the Dallas take-line and along the south property line. Parking rows of up to twenty (20) parking spaces shall be allowed along the west property line. The 5 feet required parking lot perimeter buffer will not be provided due to existing undisturbed landscape within the take-line area and to the east between the south parking lot and the railroad.

. . ."

Section 4. That all provisions of the ordinances of the City of Rowlett in conflict with the provisions of this ordinance be and the same are hereby repealed and all other provisions of the ordinances of the City of Rowlett not in conflict with the provisions of this ordinance shall remain in full force and effect.

Section 5. That an offense committed before the effective date of this ordinance is governed by prior law and the provisions of the Code of Ordinances, as amended, in effect when the offense was committed and the former law is continued in effect for this purpose.

Section 6. That should any sentence, paragraph, subdivision, clause, phrase or section of this ordinance be adjudged or held to be unconstitutional, illegal or invalid, the same shall not affect the validity of this ordinance as a whole, or any part or provision hereof other than the part so decided to be invalid, illegal or unconstitutional, and shall not affect the validity of the Comprehensive Zoning Ordinance as a whole.

Section 7. That any person, firm or corporation violating any of the provisions or terms of this ordinance shall be subject to the same penalty as provided for in the Comprehensive Zoning Ordinance of the City of Rowlett, as heretofore amended, and upon conviction shall be punished by a fine not to exceed the sum of Two Thousand Dollars ($2,000.00) for each offense; and each and every day such violation shall continue shall be deemed to constitute a separate offense.

Section 8. This ordinance shall take effect immediately from and after its passage and the publication of the caption, as the law in such cases provides

ATTACHMENTS

Exhibit A – Legal Description
Exhibit B – Revised Concept Plan
Attachment 1 – Location Map
Attachment 2 – Planned Development Ordinance #070-07
Attachment 3 – Site Photos
Attachment 4 – Public Notice Response

Exhibit “A”

All that certain lot, tract or parcel of land situated in the W.H. THOMAS SURVEY, ABSTRACT NO. 213, City of Rowlett, Rockwall County, Texas, and being a part of that tract of land as described in a Warranty deed from H. Wailen York to D.L. Faulkner, et al as recorded in Volume 178, Page 415 of the Real Estate Records of Rockwall County, Texas, and being more particularly described as follows:

BEGINNING at a 1/2" iron rod found for corner in the East right-of-way line of Dalrock Road (R.O.W. Deed Vol. 1954, Pg. 224) at its intersection with the South boundary line of the above cited tract of land said point also being in the curving North right-of-way line of the M.K. & T. Railroad (100' R.O.W.) ;

THENCE N. 00 deg. 22 min. 41 sec. W. along said right-of-way line, a distance of 522.45 feet to a 1/2" iron rod with yellow plastic cap stamped "R.S.C.I. RPLS 5034" set for corner;

THENCE N. 05 deg. 39 min. 08 sec. E. along said right-of-way line, a distance of 5.30 feet to a 1/2" iron rod found for corner;

THENCE N. 00 deg. 07 min. 51 sec. W. along said right-of-way line, a distance of 100.00 feet to a 1/2" iron rod found for corner;

THENCE N. 05 deg. 51 min. 44 sec. W. along said right-of-way line, a distance of 10.46 feet to a 1/2" iron rod with yellow plastic cap stamped "R.S.C.I. RPLS 5034" set for corner;

THENCE N. 00 deg. 22 min. 52 sec. W. along said right-of-way line, a distance of 95.43 feet to a 1/2" iron rod with yellow plastic cap stamped "R.S.C.I. RPLS 5034" set for corner;

THENCE N. 89 deg. 37 min. 08 sec. E., a distance of 5.69 feet to a 1/2" iron rod with yellow plastic cap stamped "R.S.C.I. RPLS 5034" set for corner in the East boundary line of said Faulkner tract and being in the West take line of Lake Ray Hubbard City of Dallas tract, as recorded in Volume 62, Page 312 of the Deed Records of Rockwall County, Texas;

THENCE S. 19 deg. 53 min. 09 sec. E. along said Take line, a distance of 337.02 feet to a City of Dallas concrete monument found for corner;

THENCE S. 15 deg. 23 min. 12 sec. W. along said Take line, a distance of 179.64 feet to a 1/2" iron rod found for corner;

THENCE S. 21 deg. 59 min. 02 sec. E. along said Take line, a distance of 280.69 feet to a 1/2" iron rod found for corner in the North line of the M.K. & T. Railroad 100 foot right-of-way, said point being at the Southeast corner of said Faulkner tract;

THENCE in a Northwesterly direction along a curve to the right having a central angle of 02 deg. 11 min. 43 sec., a radius of 4533.66 feet, a tangent of 86.87 feet, a chord of N. 84 deg. 26 min. 32 sec. W., 173.70 feet along said right-of-way line, an arc distance of 173.71 feet to the POINT OF BEGINNING and containing 1.51 acres or 65,962 square feet of land.

EXHIBIT B

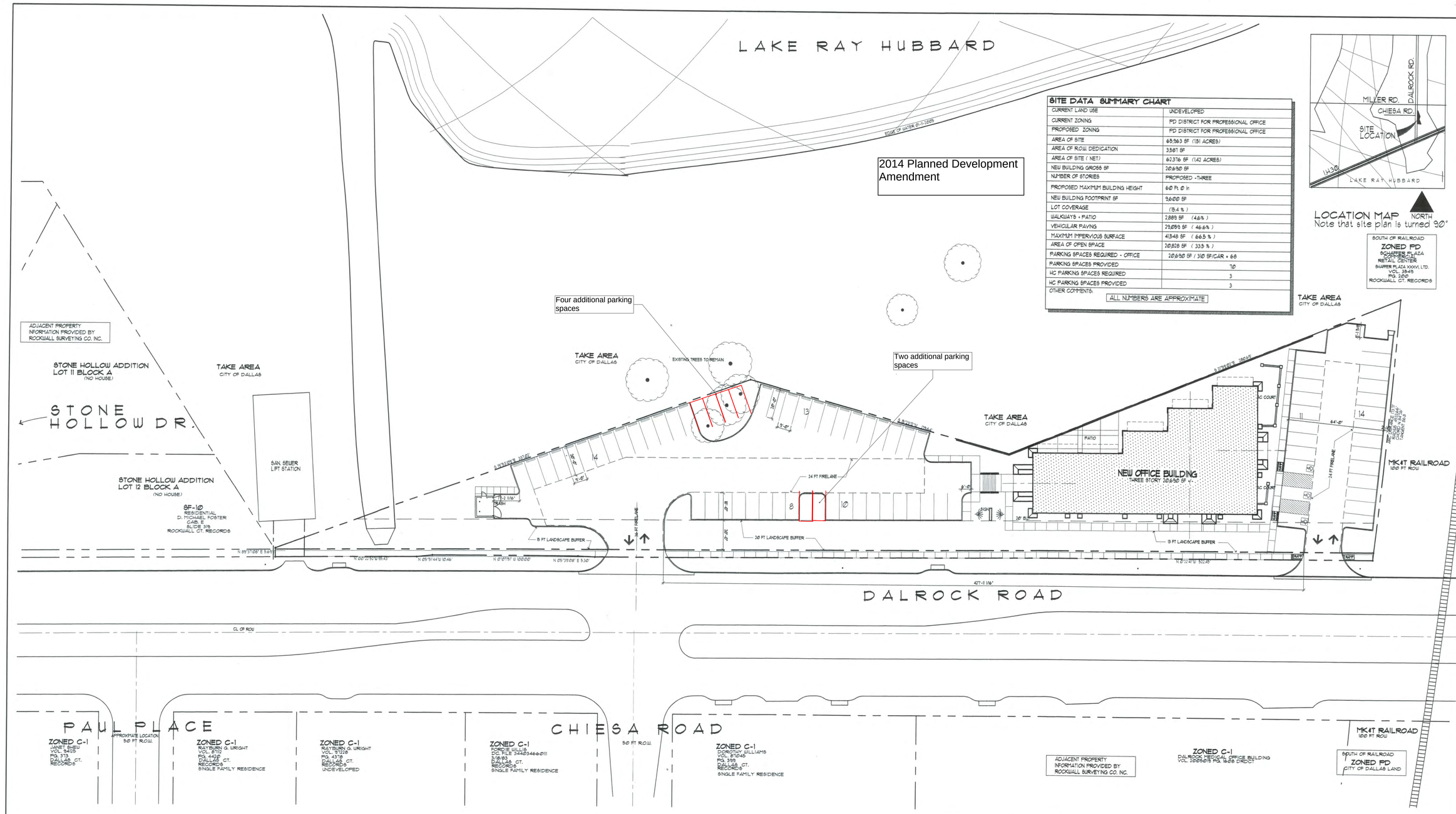

SITE DATA SUMMARY CHART	
CURRENT LAND USE	UNDEVELOPED
CURRENT ZONING	PD DISTRICT FOR PROFESSIONAL OFFICE
PROPOSED ZONING	PD DISTRICT FOR PROFESSIONAL OFFICE
AREA OF SITE	65,963 SF (151 ACRES)
AREA OF R.O.W. DEDICATION	3,587 SF
AREA OF SITE (NET)	62,376 SF (1.42 ACRES)
NEW BUILDING GROSS SF	20,690 SF
NUMBER OF STORIES	PROPOSED -THREE
PROPOSED MAXIMUM BUILDING HEIGHT	60 Ft. 0 in.
NEW BUILDING FOOTPRINT SF	9,600 SF
LOT COVERAGE	(15.4 %)
WALKWAYS + PATIO	2,889 SF (4.6%)
VEHICULAR PAVING	29,099 SF (46.6%)
MAXIMUM IMPERVIOUS SURFACE	41,548 SF (66.5 %)
AREA OF OPEN SPACE	20,828 SF (33.5 %)
PARKING SPACES REQUIRED - OFFICE	20,690 SF / 310 SF/CAR = 68
PARKING SPACES PROVIDED	70
HC PARKING SPACES REQUIRED	3
HC PARKING SPACES PROVIDED	3
OTHER COMMENTS:	ALL NUMBERS ARE APPROXIMATE

LOCATION MAP NORTH
Note that site plan is turned 90°

SOUTH OF RAILROAD
ZONED PD
SCHAFFER PLAZA COMMERCIAL RETAIL CENTER
SHAFFER PLAZA 1000VI, LTD.
VOL. 99149
PG. 2210
ROCKWALL CT. RECORDS

The Development of this site will be in accordance with City of Rowlett Development Standards.

Statement of Purpose and Intent:

A. Proposed Use: Private Office Building

B. Existing Zoning : PD (Planned Development)

C. Impact on Transportation System: A traffic impact analysis (TIA) is not required for the proposed office building.

D. Impact on Water and Wastewater Utilities: The propsed new water and wastewater lines will connect to the existing water line and wastewater line located under Dalrock Rd.

E. Impact on Adjacent Land Uses: There will be no impact on the land use to the south which is a 100 foot R.O.W. for the MK & T. railroad. There will be little impact on the residential lots to the north since they are about 200 feet from the nearest parking area and about 600 feet from the building. Lake land is to the east.

F. Conformance to the Comprehensive Plan: The proposed use complies with the current designation for this land on the comprehensive plan.

Deviations from current development standards / regulations not specifically addressed / listed for approval as part of planned development regulations may require a hearing/ approval by the board of adjustment (BOA).

This Concept Plan is for illustrative purposes only and subject to change. This Concept Plan, along with development regulations are intended to describe the intent of the Planned Development. Significant deviations from this Concept Plan, as determined by the Director of Planning, will require an amendment to the Concept Plan and as necessary, the development regulations.

ZONING CONCEPT PLAN
EXHIBIT B

ADDITION:
ANDREWS ADDITION , BLOCK A . LOT 1.

OWNER:
K.E. ANDREWS & CO.
P.O. BOX 670949
MESQUITE, TEXAS 75187-0849
CONTACT: MARK ANDREWS 972-203-2436

ARCHITECT:
TERRY R. CUNNINGHAM, ARCHITECTS
1903 CENTRAL DRIVE SUITE 401
BEDFORD, TEXAS 76021
CONTACT: TERRY CUNNINGHAM 817-354-4289

CIVIL ENGINEER:
JDJR ENGINEERS & CONSULTANTS INC.
2500 TEXAS DRIVE SUITE 100
IRVING, TEXAS 75062
CONTACT: JIM DEWEY JR. 972-252-5357

TERRY R. CUNNINGHAM
ARCHITECTS
WWW.TRCARCHITECTS.COM
1903 CENTRAL DRIVE, SUITE 401 - BEDFORD, TEXAS 76021 - (817)354-4289
FAX (817)571-0034

© COPYRIGHT 2007 TERRY R. CUNNINGHAM

ANDREWS OFFICE CENTER
DALROCK ROAD
ROWLETT, TEXAS

SHEET TITLE:
REVISED CONCEPT SITE PLAN

DATE: 8/31/07
REVISED: 10/2/07
REVISED:
REVISED:

SHEET:
SP1

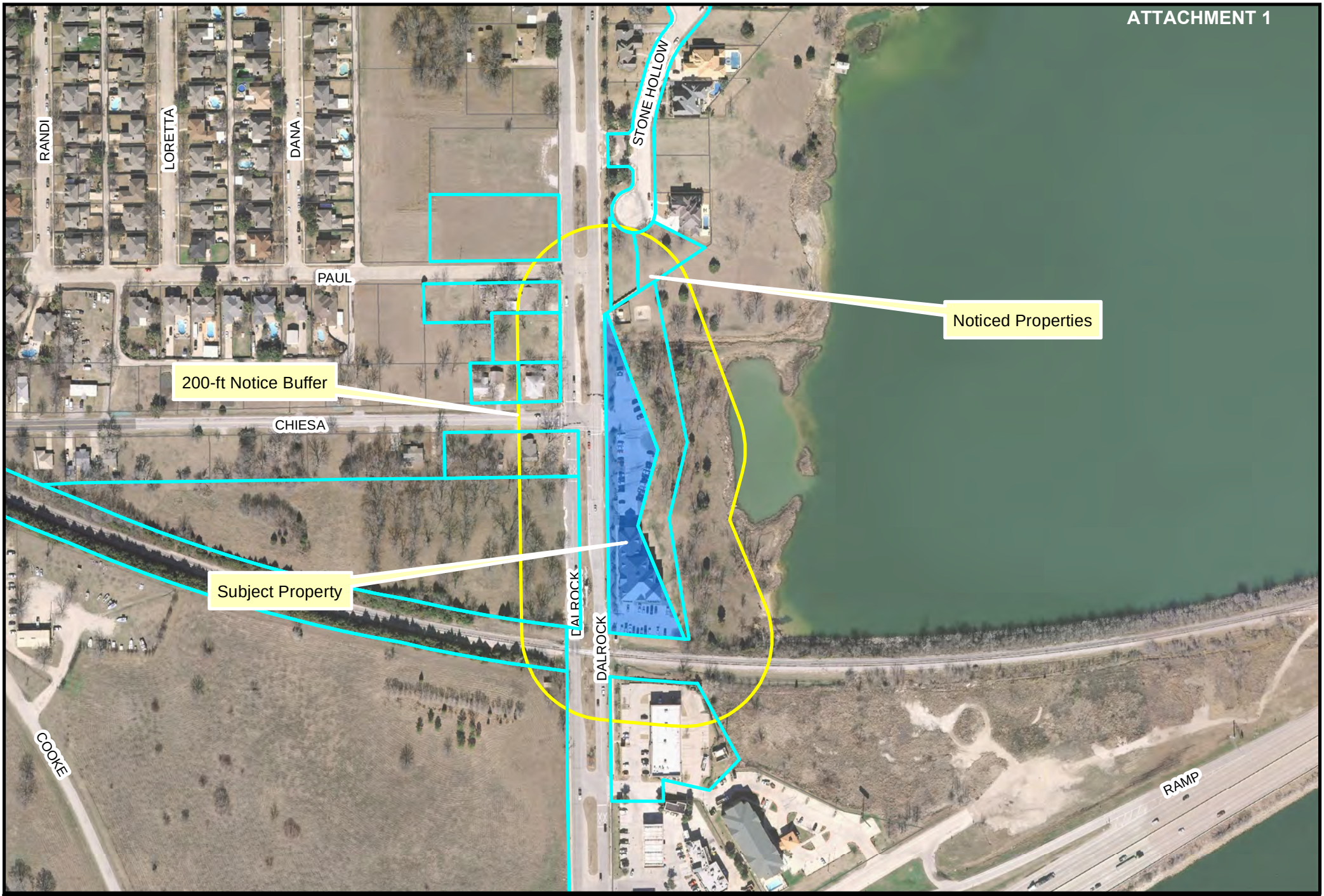

Rowlett TEXAS

K.E. Andrews
Parking Lot Expansion
1900 Dalrock Road
Map Created: June 6, 2014

N

PD AMENDMENT
200 FT NOTICE
LOCATION MAP

Department of Development Services

NOTICE OF PUBLIC HEARING

TO: Property Owner

RE: Application for a Planned Development Amendment

LOCATION: The subject property is located at 1900 Dalrock Road further described as Lot 1, Block A of the Andrews Addition to the City of Rowlett, Rockwall County, Texas. (Case Number PD14-718). A map is attached for your reference. This notice and the notification area are required under Chapter 211.007 of the Texas Local Government Code.

EXPLANATION OF REQUEST: The applicant is requesting amendments to the Planned Development Ordinance #070-07 to allow for additional parking at the subject property.

☐ I AM IN FAVOR OF THE REQUEST FOR THE FOLLOWING REASONS:

☐ I AM OPPOSED TO THE REQUEST FOR THE FOLLOWING REASONS:

COMMENTS:

_____

_____

SIGNATURE: _____

ADDRESS:

Your written comments are being solicited in the above case. Additional information is available in the Department of Development Services located at 3901 Main Street. The Planning and Zoning Commission of the City of Rowlett, Texas, will hold a public hearing at 7:00 p.m. on the **24th day of June, 2014**, and that the City Council will hold a public hearing at 7:30 p.m. on the **1st day of July, 2014**, both at the Municipal Center, 4000 Main Street, Rowlett, Texas.

Please legibly respond in ink. If the signature and/or address are missing, your comments will not be recorded. Your response must be received in the Development Service Department by 5 pm on Wednesday, June 18, 2014, for your comments to be included in the Planning and Zoning Commission packet and/or by Wednesday, June 25, 2014, to be included in the City Council packet. All responses received by June 25th will be forwarded to the Council as well; it is not necessary to respond twice. Responses received after the times noted above shall not be counted in the record of response.

Any owner of property subject to a proposed rezoning or affected by a proposed rezoning may protest the rezoning by filing a written protest (this form is sufficient) with the Director of Development Services within the time specified above. The protest shall object to the zoning map amendment, contain a legal description of the property on behalf of which the protest is made, and be signed by the owner of the property. If protests in the form of opposition are received from property owners within 200 feet of the subject property, and the property owners own a combined minimum of 20 percent or more of the land area, approval by the city council shall only occur with a concurring vote of at least three-fourths of the full membership of the city council.

If you have any questions concerning this request, please contact the Department of Development Services Phone 972-412-6166 FAX 972-412-6228 glangford@rowlett.com	**RETURN BY FAX OR MAIL** City of Rowlett Development Services PO Box 99 Rowlett, TX 75030-0099

City of Rowlett

Official Copy

Ordinance: ORD-070-07

4000 Main Street
P.O. Box 99
Rowlett, TX 75030-0099
www.rowlett.com

File Number: 2007-513 **Enactment Number: ORD-070-07**

AN ORDINANCE OF THE CITY COUNCIL OF THE CITY OF ROWLETT, TEXAS, AMENDING THE COMPREHENSIVE PLAN, COMPREHENSIVE ZONING ORDINANCE, AND ZONING MAP AND CHANGING THE ZONING FROM PLANNED DEVELOPMENT (PD) PROFESSIONAL OFFICE DISTRICT TO A REVISED PLANNED DEVELOPMENT (PD) PROFESSIONAL OFFICE DISTRICT TO ALLOW CONSTRUCTION OF AN OFFICE BUILDING CONTAINING 20,690± SQUARE FEET FOR PROFESSIONAL OFFICE USES ON 1.5± ACRES OF LAND LOCATED ON THE EAST SIDE OF DALROCK ROAD, 850± FEET NORTH OF THE WEST-BOUND FRONTAGE ROAD OF I-30; PROVIDING A REPEALING CLAUSE; PROVIDING A SEVERABILITY CLAUSE; PROVIDING FOR FINES; AND PROVIDING AN EFFECTIVE DATE.

WHEREAS, Mark Andrews, owner of the subject property, made application for a change in zoning, requesting a Revised Planned Development-Professional Office zoning; and

WHEREAS, the Planning and Zoning Commission of the City of Rowlett and the governing body of the City of Rowlett, in compliance with the laws of the State of Texas and the ordinances of the City of Rowlett, have given the requisite notices by publication and otherwise, and have held public hearings and afforded a full and fair hearing and where the governing body in the exercise of its legislative discretion has concluded that the Zoning Ordinance of the City of Rowlett should be amended.

NOW THEREFORE, BE IT ORDAINED BY THE CITY COUNCIL OF THE CITY OF ROWLETT, TEXAS:

Section 1: That the Comprehensive Plan, Comprehensive Zoning Ordinance, and Zoning Map of the City of Rowlett, Texas are hereby amended by granting a change in zoning for 1.5± acres of land from Planned Development (PD) Professional Office District to a Revised Planned Development (PD) Professional Office District to allow construction of an office building containing 20,690± square feet for Professional Office uses located on the east side of Dalrock Road, 850± feet north of the west-bound frontage road of I-30.

Section 2: That the property described in Exhibit 'A' (Legal Description) shall be developed in accordance with the following exhibits:

Exhibit 'B' - Zoning Concept Site Plan
Exhibit 'C' - Development Regulations
Exhibit 'D' - Façade Plan

Section 3: That all provisions of the ordinances at the City of Rowlett and the Comprehensive Plan, and Zoning Ordinances of the City of Rowlett in conflict with the provisions of this ordinance be, and the same are developed and hereby, repealed, and all other provisions of the ordinances of the City of Rowlett not in

conflict with the provisions of this ordinance shall remain in full force and effect.

Section 4: That should any sentence, paragraph, subdivision, clause, phrase or section of this ordinance be adjudged or held to be unconstitutional, illegal or invalid, the same not affect the validity of this ordinance as a whole, or any part or provision thereof other than the part so decided to be invalid, illegal or unconstitutional, and shall not affect the validity of the Comprehensive Zoning Ordinance as a whole.

Section 5 An offense committed before the effective date of this ordinance is governed by the prior law and the provisions of the Comprehensive Zoning Ordinance, as amended, in effect when the offense was committed and the former law is continued in effect for this purpose.

Section 6: That any person, firm or corporation violating any of the provisions or terms of this ordinance shall be subject to the same penalty as provided for in the Comprehensive Zoning Ordinance of the City of Rowlett, as heretofore amended, and upon conviction shall be punished by a fine not to exceed the sum of Two Thousand ($2,000.00) Dollars for each offense; and each and every day such violation shall continue shall be deemed to constitute a separate offense.

Section 7: That this ordinance shall take effect immediately from and after its passage and the publication of the caption of said ordinance as the law in such case provides.

At a meeting of the City Council on 11/6/2007, a motion was made by Councilmember Maggiotto, seconded by Mayor Pro Tem Rushing, that this Ordinance be adopted. The motion passed by the following vote:

Ayes: 4 Mayor Harper, Councilmember Maggiotto, Councilmember Mays and Mayor Pro Tem Rushing

Absent: 2 Councilmember Alberts and Deputy Mayor Pro Tem Gottel

Approved by _____ **Date** 11-07-07
Mayor

Approved to Form by _____ **Date** 11/13/07
City Attorney

Certified by _____ **Date** 11-13-07
City Secretary

Exhibit "A"

All that certain lot, tract or parcel of land situated in the W.H. THOMAS SURVEY, ABSTRACT NO. 213, City of Rowlett, Rockwall County, Texas, and being a part of that tract of land as described in a Warranty deed from H. Wailen York to D.L. Faulkner, et al as recorded in Volume 178, Page 415 of the Real Estate Records of Rockwall County, Texas, and being more particularly described as follows:

BEGINNING at a 1/2" iron rod found for corner in the East right-of-way line of Dalrock Road (R.O.W. Deed Vol. 1954, Pg. 224) at its intersection with the South boundary line of the above cited tract of land said point also being in the curving North right-of-way line of the M.K. & T. Railroad (100' R.O.W.) ;

THENCE N. 00 deg. 22 min. 41 sec. W. along said right-of-way line, a distance of 522.45 feet to a 1/2" iron rod with yellow plastic cap stamped "R.S.C.I. RPLS 5034" set for corner;

THENCE N. 05 deg. 39 min. 08 sec. E. along said right-of-way line, a distance of 5.30 feet to a 1/2" iron rod found for corner;

THENCE N. 00 deg. 07 min. 51 sec. W. along said right-of-way line, a distance of 100.00 feet to a 1/2" iron rod found for corner;

THENCE N. 05 deg. 51 min. 44 sec. W. along said right-of-way line, a distance of 10.46 feet to a 1/2" iron rod with yellow plastic cap stamped "R.S.C.I. RPLS 5034" set for corner;

THENCE N. 00 deg. 22 min. 52 sec. W. along said right-of-way line, a distance of 95.43 feet to a 1/2" iron rod with yellow plastic cap stamped "R.S.C.I. RPLS 5034" set for corner;

THENCE N. 89 deg. 37 min. 08 sec. E., a distance of 5.69 feet to a 1/2" iron rod with yellow plastic cap stamped "R.S.C.I. RPLS 5034" set for corner in the East boundary line of said Faulkner tract and being in the West take line of Lake Ray Hubbard City of Dallas tract, as recorded in Volume 62, Page 312 of the Deed Records of Rockwall County, Texas;

THENCE S. 19 deg. 53 min. 09 sec. E. along said Take line, a distance of 337.02 feet to a City of Dallas concrete monument found for corner;

THENCE S. 15 deg. 23 min. 12 sec. W. along said Take line, a distance of 179.64 feet to a 1/2" iron rod found for corner;

THENCE S. 21 deg. 59 min. 02 sec. E. along said Take-line, a distance of 280.69 feet to a 1/2" iron rod found for corner in the North line of the M.K. & T. Railroad 100 foot right-of-way, said point being at the Southeast corner of said Faulkner tract;

THENCE in a Northwesterly direction along a curve to the right having a central angle of 02 deg. 11 min. 43 sec., a radius of 4533.66 feet, a tangent of 86.87 feet, a chord of N. 84 deg. 26 min. 32 sec. W., 173.70 feet along said right-of-way line, an arc distance of 173.71 feet to the POINT OF BEGINNING and containing 1.51 acres or 65,962 square feet of land.

LAKE RAY HUBBARD

STONE HOLLOW DR.

DALROCK ROAD

PAUL PLACE

CHIESA ROAD

NEW OFFICE BUILDING

TAKE AREA CITY OF DALLAS

STONE HOLLOW ADDITION LOT 2 BLOCK A

ADJACENT PROPERTY MONITORED BY ROCKWELL INVESTING CO. INC.

T&NO RAILROAD

ZONED PD CITY OF DALLAS LAND

ZONED C-1

SITE DATA SUMMARY CHART

CURRENT LAND USE	UNDEVELOPED
CURRENT ZONING	PD DISTRICT FOR PROFESSIONAL OFFICE
PROPOSED ZONING	PD DISTRICT FOR PROFESSIONAL OFFICE
AREA OF SITE	[illegible] SF [illegible] ACRES
AREA OF SITE DEDICATION	[illegible] SF
AREA OF SITE (NET)	[illegible] SF [illegible] ACRES
NONBUILDING GROSS SF	[illegible] SF
NUMBER OF BUILDINGS	PROPOSED - ONE
PROPOSED PROPERTY BUILDING HEIGHT	[illegible] ft
NONBUILDING FOOTPRINT SF	[illegible] SF
LOT COVERAGE	[illegible] %
BUILDINGS - PROPOSED	[illegible] SF [illegible] %
NONBUILDING PAVED	[illegible] SF [illegible] %
PROPERTY DEPENDENT SURFACE	[illegible] SF [illegible] %
AREA OF OPEN SPACE	[illegible] SF [illegible] %
PARKING SPACES REQUIRED - OFFICE	[illegible] SF / 300 SFOOR = [illegible]
PARKING SPACES PROVIDED	[illegible]
HC PARKING SPACES REQUIRED	[illegible]
HC PARKING SPACES PROVIDED	[illegible]
CONTROLLING	

ALL REPORTS ARE APPROXIMATE

LOCATION MAP NORTH
Note that site plan is turned 90°

SITE LOCATION

TALLER RD. DALROCK RD. CHIESA RD. LAKE RAY HUBBARD

SP101 CONCEPT SITE PLAN - EXHIBIT B

0 30 60 120 180

The Development of the site will be in accordance with City of Rowlett Development Standards.

Statement of Purpose and Intent.

A. Proposed Use: Private Office Building

B. Existing Zoning: PD (Planned Development)

C. Impact on Transportation System: A traffic impact analysis (TIA) is not required for the proposed office building.

D. Impact on sewer and wastewater facilities: The proposed sewer usage and wastewater flow will connect to the existing sewer line and wastewater flow located under Dalrock Rd.

E. Impact on Adjacent Land Uses: There will be no impact on the land use to the south since it is a 600 Elev. RCDA for the FOLA 3, national. There will be little impact on the wastewater flow to the north since they are about 300 feet from the nearest parking area and about 600 feet from the building. Lake land is to the east.

F. Conformance to the Comprehensive Plan: The proposed use complies with the current designation for this land on the comprehensive plan.

Deviations from current development standards (regulations and specifically addressed / listed) will approved as part of planned development. Application may require a zoning approval by the board of adjustment (BOA).

This Concept Plan is for illustrative purposes only and subject to change. This Concept Plan, along with development regulations are intended to describe the form of the Planned Development. Significant deviations from the Concept Plan, as determined by the Director of Planning, will require an amendment to the Concept Plan and to accompany the development regulations.

ZONING CONCEPT PLAN
EXHIBIT B

ADDITION:
[illegible]

OWNER:
[illegible]

ARCHITECT:
TERRY R. CUNNINGHAM ARCHITECTS
[illegible]

CIVIL ENGINEER:
[illegible]

TERRY R. CUNNINGHAM
ARCHITECTS
[illegible]

ANDREWS OFFICE CENTER
DALROCK ROAD
ROWLETT, TEXAS

SHEET TITLE:
REVISED CONCEPT SITE PLAN

DATE: 8/31/09
REVISED: 10/2/09
REVISED:
REVISED:

SHEET:
SP1

ATTACHMENT 2

OCT 03 2007

EXHIBIT "C" – Development Regulations

(Ordinance # _____)
(Andrews Office parcel: Case #ZAM07-296)

PURPOSE AND INTENT

Create Revised Planned Development (PD) District for Professional Office uses for 1.5 +/- acres of land located on the east side of Dalrock Road, 850± feet north of the west-bound frontage road of Interstate-30 Highway (I-30) as depicted/shown on the attached Exhibit 'B' – Zoning Concept Plan.

ARCHITECTURE

1. The building shall be designed to have a mountain lodge character incorporating rough natural stone, large heavy timber and rustic wood siding. The building shall contain a minimum of seventy percent (70%) masonry for the total exterior wall, per elevation, excluding doors and windows. Masonry materials shall be as defined within Masonry Ordinance No. 03-16-04A.
2. The building shall have no more than thirty percent (30%) large heavy timber, rustic wood siding and other building materials characteristic of a mountain lodge for the total exterior wall, per elevation, excluding doors and windows. These building materials shall substitute for the 20% accent material required under Ordinance No. 03-16-04A.
3. The same exterior wall material(s) and finishes used on the primary building/s shall be used on all accessory buildings, screening walls, and dumpster enclosure. Dumpster gates shall be constructed of rustic wood/timber to coordinate with the wood on the building.
4. Due to the visibility of the office center from all directions, all building facades shall be designed to provide architectural features (such as, fenestration, entries, windows, awnings, stone detailing/corbeling, etc.)
5. Roof drainage design will consists of metal gutters and downspouts on the east façade facing the take-line area. This will prevent roof storm water runoff water from falling on the decks and patios. Other elevations will not have any gutters or downspouts.

ATTACHMENT 2

LANDSCAPING

1. The landscaping for this area will comply with the landscape requirements within the Rowlett Development Code, as amended herein. Parking rows of up to fourteen (14) continuous spaces shall be allowed along the Dallas take-line and along the south property line. The 5 feet required parking lot perimeter buffer will not be provided due to existing undisturbed landscape within the take-line area and to the east between the south parking lot and the railroad.

2. The front yard landscape edge along the Dalrock Road frontage will be a minimum of 10 feet in width adjacent to the front entryway along Dalrock Road. A variable width landscape edge, which tapers on the northern end from approximately 18 feet to a minimum of 10 feet in width shall be allowed within the area north of the northern driveway.

3. The landscape edge along the East (take-line area) side of the property will have natural screening from the existing trees. There will be no additional landscape added to this area. Landscape edge along east and south side of property will have natural screening from existing trees.

TREE PRESERVATION

Subject property shall be subject to regulations contained within Chapter 98 VEGETATION of the Rowlett Development Code at the time of final development plan approval.

PAVING, PARKING AREAS, AND THOROUGHFARE

1. Driveways and parking area shall be constructed with a concrete surface in accordance with City design and construction standards. Paving surfaces consisting of brick or stone pavers may be used to delineate pedestrian crossing areas or parking area access.

2. The number of parking spaces shall not be less than outlined below:
   - Office uses – 1 space per 310 sq ft of gross floor area;

3. Right-of-way dedication for Dalrock Road shall be provided at time of Final Plat to meet minimum Master Thoroughfare Plan (MTP) requirements.

ATTACHMENT 2

4. A left-turn lane shall be constructed on Dalrock Road by the developer to serve the northern most driveway proposed. Left-turn lane shall be reviewed and approved by the Engineering Department during development plan approval process with construction during construction of the proposed office building.

SIGNAGE

1. Signage shall be in accordance with the sign regulations within the Rowlett Development Code, as amended, for height and area. The Board of Adjustment must approve any variation. The design of the sign (i.e. sign type, dimensioning, listing of materials, and other related details) shall be included with final façade plans and requires final approval by the Chief Building Official by separate permit.

ILLUMINATION

1. Lighting standards, poles and fixtures shall be compatible with the architecture of the building(s) and site.
2. All lighting shall be down-light or cut-off types oriented to eliminate glare outside the property boundaries and site improvement areas.

GENERAL

1. The maximum building footprint will be 12,500 sq ft.
2. All utilities shall be constructed underground at the time of construction with the exception of the existing overhead lines along Dalrock Road.
3. All trash containers shall be screened utilizing the same materials used on the building. (i.e. rock enclosure with rustic wood gates – see regulation #3 above under Architecture).
4. No building shall exceed 3 stories in height.
5. Front yard - Minimum 20 feet from street right-of-way. These regulations will allow a 3 feet encroachment for items such as columns, porches, porticos and porte cocheres. Any additional right-of-way needed for Dalrock Road to comply with the current Master Thoroughfare Plan shall be dedicated by plat.
6. Side yard setback – Minimum 10 feet.
7. Rear yard setback – No setback requirement adjacent to Take Line area.
8. Sidewalks – Sidewalks and barrier free ramps shall be required adjacent to Dalrock Road..

ATTACHMENT 2

WEST ELEVATION

TERRY R. CUNNINGHAM
ARCHITECTS
WWW.TRCARCHITECTS.COM
1903 CENTRAL DRIVE, SUITE 401 - BEDFORD, TEXAS 76021 - (817)354-4289
FAX (817)571-0034
© COPYRIGHT 2007 TERRY R. CUNNINGHAM

ANDREWS OFFICE CENTER

DALROCK ROAD, ROWLETT, TEXAS

EXHIBIT D

ATTACHMENT 2

EAST ELEVATION

TERRY R. CUNNINGHAM
ARCHITECTS
WWW.TRCARCHITECTS.COM
1903 CENTRAL DRIVE, SUITE 401 - BEDFORD, TEXAS 76021 - (817)354-4209
FAX (817)571-0034
© COPYRIGHT 2007 TERRY R. CUNNINGHAM

ANDREWS OFFICE CENTER

DALROCK ROAD, ROWLETT, TEXAS

EXHIBIT D

ATTACHMENT 2

NORTH ELEVATION

TERRY R. CUNNINGHAM
ARCHITECTS
WWW.TRCARCHITECTS.COM
1908 CENTRAL DRIVE, SUITE 401 - BEDFORD, TEXAS 76021 - (817)354-4289
FAX (817)571-0034
© COPYRIGHT 2007 TERRY R. CUNNINGHAM

ANDREWS OFFICE CENTER

DALROCK ROAD, ROWLETT, TEXAS

EXHIBIT D

ATTACHMENT 2

SOUTH ELEVATION

TERRY R. CUNNINGHAM
ARCHITECTS
WWW.TRCARCHITECTS.COM
1903 CENTRAL DRIVE, SUITE 401 - BEDFORD, TEXAS 76021 - (817)354-4289
FAX (817)571-0034
© COPYRIGHT 2007 TERRY R. CUNNINGHAM

ANDREWS OFFICE CENTER

DALROCK ROAD, ROWLETT, TEXAS

EXHIBIT D

ATTACHMENT 2

Andrews Addition Site Photos

Andrews Addition Site Photos

Andrews Addition Site Photos

Andrews Addition Site Photos

Rowlett
TEXAS

Department of Development Services

NOTICE OF PUBLIC HEARING

TO: Property Owner

RE: Application for a Planned Development Amendment

LOCATION: The subject property is located at 1900 Dalrock Road further described as Lot 1, Block A of the Andrews Addition to the City of Rowlett, Rockwall County, Texas. (Case Number PD14-718). A map is attached for your reference. This notice and the notification area are required under Chapter 211.007 of the Texas Local Government Code.

EXPLANATION OF REQUEST: The applicant is requesting amendments to the Planned Development Ordinance #070-07 to allow for additional parking at the subject property.

☑ I AM IN FAVOR OF THE REQUEST FOR THE FOLLOWING REASONS:

☐ I AM OPPOSED TO THE REQUEST FOR THE FOLLOWING REASONS:

COMMENTS:

SIGNATURE: Janet Shen Janet Shen

ADDRESS: 7001 Waterbury Dr. Rowlett, TX 75089

Your written comments are being solicited in the above case. Please return to Rowlett Development Services located at 3901 Main Street. The Planning and Zoning Commission of the City of Rowlett, Texas, will hold a public hearing at 7:00 p.m. on the 24th day of June, 2014, and that the City Council will hold a public hearing at 7:30 p.m. on the 1st day of July, 2014, both at the Municipal Center, 4000 Main Street, Rowlett, Texas.

Please legibly respond in ink. If the signature and/or address are missing, your comments will not be recorded. Your response must be received in the Development Service Department by 5 pm on Wednesday, June 18, 2014, for your comments to be included in the Planning and Zoning Commission packet and/or by Wednesday, June 25, 2014, to be included in the City Council packet. All responses received by June 25th will be forwarded to the Council as well; it is not necessary to respond twice. Responses received after the times noted above shall not be counted in the record of response.

Any owner of property subject to a proposed rezoning or affected by a proposed rezoning may protest the rezoning by filing a written protest (this form is sufficient) with the Director of Development Services within the time specified above. The protest shall object to the zoning map amendment, contain a legal description of the property on behalf of which the protest is made, and be signed by the owner of the property. If protests in the form of opposition are received from property owners within 200 feet of

ATTACHMENT 4

Rowlett
TEXAS

Department of Development Services

NOTICE OF PUBLIC HEARING

TO: Property Owner

RE: Application for a Planned Development Amendment

LOCATION: The subject property is located at 1900 Dalrock Road further described as Lot 1, Block A of the Andrews Addition to the City of Rowlett, Rockwall County, Texas. (Case Number PD14-718). A map is attached for your reference. This notice and the notification area are required under Chapter 211.007 of the Texas Local Government Code.

EXPLANATION OF REQUEST: The applicant is requesting amendments to the Planned Development Ordinance #070-07 to allow for additional parking at the subject property.

☐ I AM IN FAVOR OF THE REQUEST FOR THE FOLLOWING REASONS:

☒ I AM OPPOSED TO THE REQUEST FOR THE FOLLOWING REASONS:

COMMENTS:

SIGNATURE: AMARILLO NATIONAL BANK-Trustee OF LOLISA HORTON TRUST
Burt E. G. VP & TO

ADDRESS: 2106 STONE HOLLOW DRIVE ROWLETT, TX

Your written comments are being solicited in the above case. Additional information is available in the Department of Development Services located at 3901 Main Street. The Planning and Zoning Commission of the City of Rowlett, Texas, will hold a public hearing at 7:00 p.m. on the **24th day of June, 2014**, and that the City Council will hold a public hearing at 7:30 p.m. on the **1st day of July, 2014**, both at the Municipal Center, 4000 Main Street, Rowlett, Texas.

Please legibly respond in ink. If the signature and/or address are missing, your comments will not be recorded. Your response must be received in the Development Service Department by 5 pm on Wednesday, June 18, 2014, for your comments to be included in the Planning and Zoning Commission packet and/or by Wednesday, June 25, 2014, to be included in the City Council packet. All responses received by June 25th will be forwarded to the Council as well; it is not necessary to respond twice. Responses received after the times noted above shall not be counted in the record of response.

Any owner of property subject to a proposed rezoning or affected by a proposed rezoning may protest the rezoning by filing a written protest (this form is sufficient) with the Director of Development Services within the time specified above. The protest shall object to the zoning map amendment, contain a legal description of the property on behalf of which the protest is made, and be signed by the owner of the property. If protests in the form of opposition are received from property owners within 200 feet of the subject property, and the property owners own a combined minimum of 20 percent or more of the land area, approval by the city council shall only occur with a concurring vote of at least three-fourths of the full membership of the city council.

If you have any questions concerning this request, please contact the Department of Development Services Phone 972-412-6166 FAX 972-412-6228 glangford@rowlett.com	**RETURN BY FAX OR MAIL** City of Rowlett Development Services PO Box 99 Rowlett, TX 75030-0099

ATTACHMENT 4

Rowlett
TEXAS

Department of Development Services

NOTICE OF PUBLIC HEARING

TO: Property Owner

RE: Application for a Planned Development Amendment

LOCATION: The subject property is located at 1900 Dalrock Road further described as Lot 1, Block A of the Andrews Addition to the City of Rowlett, Rockwall County, Texas. (Case Number PD14-718). A map is attached for your reference. This notice and the notification area are required under Chapter 211.007 of the Texas Local Government Code.

EXPLANATION OF REQUEST: The applicant is requesting amendments to the Planned Development Ordinance #070-07 to allow for additional parking at the subject property.

☐ I AM IN FAVOR OF THE REQUEST FOR THE FOLLOWING REASONS:

☒ I AM OPPOSED TO THE REQUEST FOR THE FOLLOWING REASONS:

COMMENTS: I would like for you to leave us as
is. Set back off dock lots with Mature Trees & Bushes

SIGNATURE: Timothy Ellis

ADDRESS: 1901 Chelsea Rd Rowlett Tex 75088

Your written comments are being solicited in the above case. Additional information is available in the Department of Development Services located at 3901 Main Street. The Planning and Zoning Commission of the City of Rowlett, Texas, will hold a public hearing at 7:00 p.m. on the **24th day of June, 2014**, and that the City Council will hold a public hearing at 7:30 p.m. on the **1st day of July, 2014**, both at the Municipal Center, 4000 Main Street, Rowlett, Texas.

Please legibly respond in ink. If the signature and/or address are missing, your comments will not be recorded. Your response must be received in the Development Service Department by 5 pm on Wednesday, June 18, 2014, for your comments to be included in the Planning and Zoning Commission packet and/or by Wednesday, June 25, 2014, to be included in the City Council packet. All responses received by June 25th will be forwarded to the Council as well; it is not necessary to respond twice. Responses received after the times noted above shall not be counted in the record of response.

Any owner of property subject to a proposed rezoning or affected by a proposed rezoning may protest the rezoning by filing a written protest (this form is sufficient) with the Director of Development Services within the time specified above. The protest shall object to the zoning map amendment, contain a legal description of the property on behalf of which the protest is made, and be signed by the owner of the property. If protests in the form of opposition are received from property owners within 200 feet of the subject property, and the property owners own a combined minimum of 20 percent or more of the land area, approval by the city council shall only occur with a concurring vote of at least three-fourths of the full membership of the city council.

If you have any questions concerning this request, please contact the Department of Development Services Phone 972-412-6166 FAX 972-412-6228 glangford@rowlett.com	**RETURN BY FAX OR MAIL** City of Rowlett Development Services PO Box 99 Rowlett, TX 75030-0099

City of Rowlett

Staff Report

4000 Main Street
P.O. Box 99
Rowlett, TX 75030-0099
www.rowlett.com

AGENDA DATE: 07/01/14 **AGENDA ITEM**: 8D

TITLE

Conduct a public hearing and take action on a request for a Special Use Permit to allow a foot reflexology massage establishment in the General Commercial/Retail Zoning District (C-2) at 5101 Rowlett Road, Suite 5115, Rowlett, Dallas County, Texas. (SUP14-714)

STAFF REPRESENTATIVE

Garrett Langford, Principal Planner

SUMMARY

The new owner of Enjoy Foot Spa, Xiao Dong, is requesting a Special Use Permit to continue to allow the operation of a foot reflexology business at 5101 Rowlett Road, Suite 5115 Rowlett Road (Exhibit A – Property Location). The previous owner, Huizha Pu, was granted a Conditional Use Permit on March 26, 2013, to allow the foot reflexology business. Per the Rowlett Development Code, a Conditional Use Permit is not transferable to a new owner. On May 21, 2013, the Rowlett Development Code was amended to replace Conditional Use Permits with Special Use Permits. Therefore, the new owner is applying for a Special Use Permit in order to continue to operate the foot reflexology business at this location.

It should be noted that the business is continuing to operate under new ownership while this request is being pursued. The applicant has acknowledged that should the SUP be denied, they will have to cease operation and vacate the property.

The Planning and Zoning Commission voted unanimously to recommend approval of this item at their June 10, 2014, meeting.

BACKGROUND INFORMATION

The subject property is a 1,460 square foot shopping center lease space addressed as 5101 Rowlett Road. It is located on the southwest corner of Lakeview Parkway and Rowlett Road. Current tenants include a flower shop, a donut shop, restaurants, a beauty supply shop and a game supply shop (Attachment 1 – Site Photos). This shopping center is zoned General Commercial/Retail Zoning District, C-2.

The applicant, Xiao Dong, submitted a Certificate of Occupancy application due to a change in ownership of a foot reflexology business called Enjoy Foot Spa. The Planning and Zoning Commission approved a Conditional Use Permit on March 26, 2013, to allow Enjoy Foot Spa, owned and operated by Huizha Pu to open a foot reflexology business. The Rowlett Development Code does not allow for the transfer of a Conditional Use Permit from one owner to another. As a result, the new owner, Xiao Dong, must obtain Special Use Permit approval.

On May 21, 2013, the Rowlett Development Code was amended to replace Conditional Use Permits with Special Use Permits. Therefore, the new owner is applying for a Special Use Permit in order to continue to operate the foot reflexology business at this location. The applicant plans to continue the operation as is with no changes to the operation or to floor plan (Attachment 2 – Floor Plan).

Foot reflexology is not a use specifically listed in the Rowlett Development Code (RDC). Per Section 77-301.D of the RDC, the Director of Development Services has the authority to make interpretations regarding classification of new or unlisted uses. The Director has determined this use most closely falls into the category of "Massage Establishment". Per the amendment to the RDC adopted on May 21, 2013, a Special Use Permit (SUP) is required for a massage establishment in the C-2 zoning district.

The Texas Department of State Health Services (DSHS) describes reflexology as "energy work on the hands and feet only which involves holding or touching on the energy points. It does not involve manipulating soft tissue, stroking, rubbing, tapping, stretching, bathing, scrubbing, or the use of oils or lotions." DSHS does not require a massage therapist license for reflexology of the hands and feet. A person cannot touch any other part of the body unless they have a State issued massage therapist license. Consideration and approval of this Special Use Permit request is limited to foot reflexology.

DISCUSSION

Section 77-206.D of the Rowlett Code of Ordinances lists the criteria for approval of Special Use Permits. Recommendations and decisions on special use permits shall be based on consideration of the criteria below. Staff has added additional comments in bold italics where applicable.

1. The proposed special use permit is consistent with the comprehensive plan and other infrastructure-related plans, all applicable provisions of this Code, and applicable state and federal regulations;

   The subject property is not in any of the 13 identified opportunity areas in the Realize Rowlett 2020 Comprehensive Plan. As such, the existing zoning and guiding principles should inform development.

   The application can be interpreted to address Guiding Principle 2, "Grow the City's economy through diversification of job and business opportunities," and Guiding Principle 8, "Create centers with a mix of activities at key locations in Rowlett," of the Realize Rowlett 2020 Comprehensive Plan.

   Based on the Realize Rowlett 2020 Comprehensive Plan, a foot reflexology business would be a compatible use.

2. The proposed special use permit is consistent with the purpose and intent of the zoning district in which it is located;

The zoning district is C-2. Per Section 77-203.B.5 of the RDC, the C-2 district "is intended for the conduct of retail type uses, with only a subordinate percentage of a development associated with other retail and office uses." A massage establishment would be consistent with the zoning district.

3. Whether the proposed special use permit meets the challenge of some changing condition, trend, or fact;

Foot reflexology is a growing business type throughout the Dallas Fort Worth area. It is best categorized as a "Massage establishment" based on the RDC even though no massage licenses are required by the state. This type of use exists in other similar shopping centers in Rowlett and in surrounding cities.

4. Whether the proposed special use permit will protect or enhance the health, safety, morals, or general welfare of the public;

The proposed use should not negatively affect the health, safety, morals, or general welfare of the public.

5. Whether the municipality and other service providers will be able to provide sufficient transportation and utility facilities and services to the subject property, while maintaining sufficient levels of service to existing development;

The property has access to Lakeview Parkway (SH 66), a Type A+ thoroughfare based on the Master Thoroughfare Plan and access to Rowlett Road, a Type A thoroughfare based on the Master Thoroughfare Plan. In addition, water and sewer services are already available at the site.

6. Whether the proposed special use permit is consistent with or will have significant adverse impacts on other property in the vicinity of the subject tract; and

The property should not have any adverse impacts on other property within the vicinity. The shopping center contains numerous personal service and retail establishments including a donut shop, a flower shop, a game store, a restaurant, and a beauty supply store.

7. The suitability of the subject property for the existing zoning and the proposed use sought by the special use permit.

The subject property is already developed as a shopping center with retail and personal service uses. The proposed foot reflexology business would complement

these existing uses and provide neighborhood-based services oriented to local customers. This meets the intent of the C-2 zoning district and should be compatible with surrounding uses.

It is staff's opinion that the foot reflexology will not have an adverse impact on the surrounding uses and that it complies with the criteria in the RDC. Staff recommends a condition of approval that the Special Use Permit shall be limited to reflexology of the feet and shall not include any other unlicensed massage services. The City Attorney provided further refinement to the proposed stipulation in the proposed ordinance below.

Public Notice

On May 23, 2014, a total of 19 notices were sent to property owners within 200 feet. As of Wednesday June 25, 2014, one response has been received in favor of the request. (Attachment 3)

A Legal Notice was published in the *Rowlett Lakeshore Times* on May 29, 2014, pursuant to the requirements set forth in the Rowlett Development Code. A zoning sign was placed on the subject property on May 29, 2014, in accordance with the Rowlett Development Code and remains on the site today.

FISCAL IMPACT/BUDGET IMPLICATIONS

N/A

RECOMMENDED ACTION

Staff recommends that City Council approve the request with the following stipulation:

1. The Special Use Permit shall be limited to reflexology of the feet and shall not include any other unlicensed massage services.

ORDINANCE

AN ORDINANCE OF THE CITY OF ROWLETT, TEXAS, AMENDING THE COMPREHENSIVE ZONING ORDINANCE, PLAN AND MAP OF THE CITY OF ROWLETT, TEXAS, AS HERETOFORE AMENDED, BY GRANTING A SPECIAL USE PERMIT FOR 1,460 SQUARE FEET OF LEASE SPACE DESCRIBED AS SUITE 5115 WITHIN PROPERTY LOCATED AT 5101 ROWLETT ROAD, BEING PART OF A 2.96 ACRE PORTION OF TRACT 6.2 IN THE U. MATTHUSEN SURVEY, ABSTRACT NO. 1017, PAGE 470, CITY OF ROWLETT, DALLAS COUNTY, TEXAS TO AUTHORIZE THE OPERATION OF A FOOT REFLEXOLOGY THERAPY ESTABLISHMENT UNDER CONDITIONS SPECIFIED HEREIN; PROVIDING DEVELOPMENT AND USE STANDARDS; PROVIDING A REPEALING CLAUSE; PROVIDING A SAVINGS CLAUSE; PROVIDING A SEVERABILITY CLAUSE; PROVIDING FOR A PENALTY OF FINE NOT TO EXCEED THE SUM OF TWO THOUSAND DOLLARS ($2,000.00) FOR EACH OFFENSE; AND PROVIDING AN EFFECTIVE DATE.

WHEREAS, the Planning and Zoning Commission of the City of Rowlett and the governing body of the City of Rowlett, in compliance with state laws with reference to amending the Comprehensive Zoning Ordinance, have given the requisite notice by publication and otherwise, and after holding due hearings and affording a full and fair hearing to all property owners and interested persons generally, the governing body of the City of Rowlett is of the opinion that said zoning ordinance and map should be amended as provided herein.

NOW, THEREFORE, BE IT ORDAINED BY THE CITY COUNCIL OF THE CITY OF ROWLETT, TEXAS:

SECTION 1. That the Comprehensive Zoning Ordinance, Plan and Map of the City of Rowlett, Texas, heretofore duly passed by the governing body of the City of Rowlett, as heretofore amended, be and the same are hereby amended by granting a Special Use Permit to authorize the operation of a foot reflexology therapy establishment for 1,460 square feet of lease space described as Suite 5115 (the "Facility") within an existing shopping center located at 5101 Rowlett Road, being part of a 2.96 acre portion of Tract 6.2 in the U. Matthusen Survey, Abstract No. 1017, Page 470, City of Rowlett, Dallas County, Texas (the "Property"), as depicted in Exhibit "A", attached hereto and incorporated herein.

SECTION 2. That the operation of a foot reflexology therapy establishment within the Facility be and is hereby authorized and allowed to be operated on the Property under the following terms and conditions:

1. The operations within the Facility shall be limited to foot reflexology therapy which is defined herein as "energy work on the hands and feet only, which involves holding or touching on the energy points; it does not involve manipulating soft tissue, stroking, rubbing, tapping, stretching, bathing, scrubbing, or the use of oils or lotions on any part of the body other than the hands and feet."
2. No massage therapy shall be conducted at the facility, which is defined herein as the manipulation of soft tissue by hand or through a mechanical or electrical apparatus for the purpose of body massage and includes effleurage (stroking), petrissage (kneading), tapotement (percussion), compression, vibration, friction, nerve strokes, and Swedish gymnastics. The terms "massage," "therapeutic massage," "massage technology," "myotherapy," "body massage," "body rub," or any derivation of those terms are synonyms for "massage therapy."
3. The Facility shall be used only in the manner and for the purposes provided herein and by the ordinances of the City of Rowlett, Texas, as heretofore amended, and as amended herein. Except as otherwise expressly provided for in this Ordinance, the development, use and occupancy of the Facility shall conform to the standards and regulations set forth in the C-2 General Commercial/Retail District of the Rowlett Development Code (Chapter 77 of the Code of Ordinances of the City of Rowlett, Texas), and the Code of Ordinances of the City of Rowlett, Texas, as amended.

4. The authorization contained in this Ordinance is not intended and shall not be construed to approve any license or development plan of any kind, including but not limited to massage establishment license, site plan, landscaping plan, façade plan, or other plan, nor to grant any license or permit of any kind, otherwise required by existing ordinances of the City.

SECTION 3. That all provisions of the ordinances of the City of Rowlett in conflict with the provisions of this ordinance as applicable to the Property be and the same are hereby repealed and all other provisions of the ordinances of the City of Rowlett not in conflict with the provisions of this ordinance shall remain in full force and effect.

SECTION 4. That an offense committed before the effective date of this ordinance is governed by the prior law and the provisions of the Code of Ordinances, as amended, in effect when the offense was committed and the former law is continued in effect for this purpose.

SECTION 5. That should any sentence, paragraph, subdivision, clause, phrase or section of this ordinance be adjudged or held to be unconstitutional, illegal or invalid the same shall not affect the validity of this ordinance as a whole or any part or provision hereof other than the part so decided to be invalid, illegal or unconstitutional, and shall not affect the validity of the Comprehensive Zoning Ordinance as a whole.

SECTION 6. That any person, firm or corporation violating any of the provisions or terms of this ordinance shall be subject to the same penalty as provided for in the Code of Ordinances of the City of Rowlett, as heretofore amended, and upon conviction shall be punished by a fine not to exceed the sum of Two Thousand Dollars ($2,000.00) for each offense; and each and every day such violation shall continue shall be deemed to constitute a separate offense.

SECTION 7. This ordinance shall take effect immediately from and after its passage and the publication of the caption, as the law and charter in such cases provide.

ATTACHMENTS

Exhibit A – Property Location
Attachment 1 – Site Photos
Attachment 2 – Floor Plan
Attachment 3 – Returned Public Notice

EXHIBIT A

LAKEVIEW
ROWLETT
ENTERPRISE
5101 Rowlett Road
Suite 5115
N
Feet
0 62.5 125 250

Enjoy Foot Spa Site Photos

Enjoy Foot Spa Site Photos

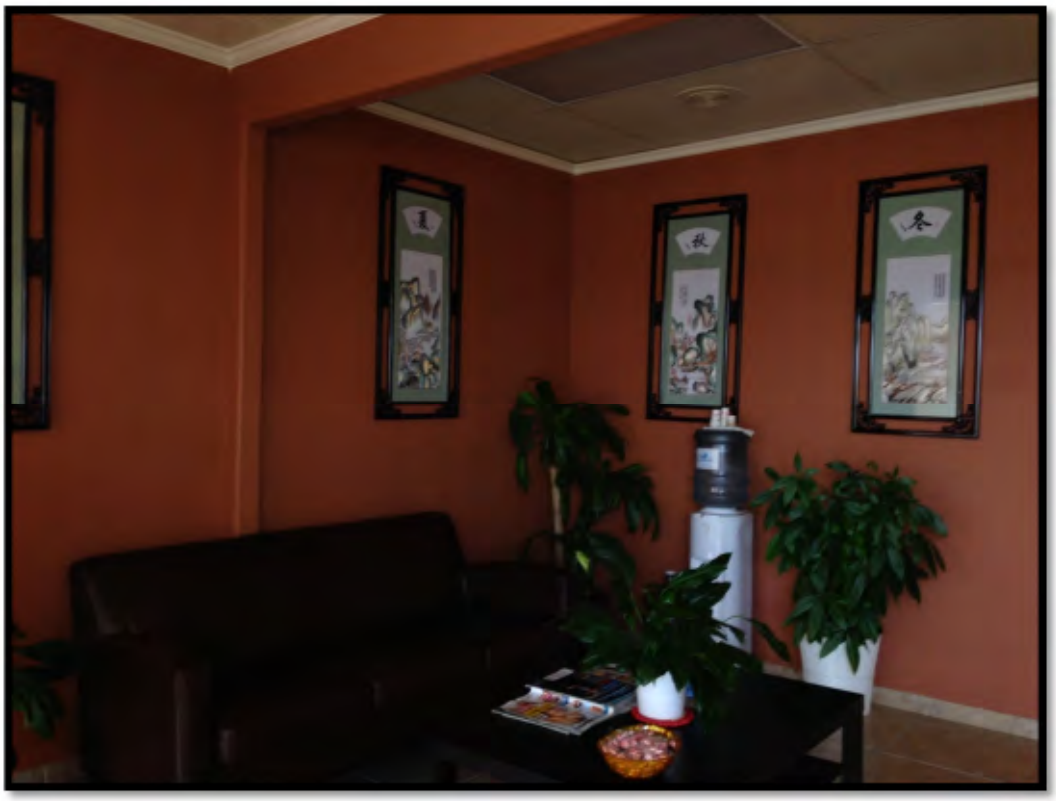

Enjoy Foot Spa Site Photos

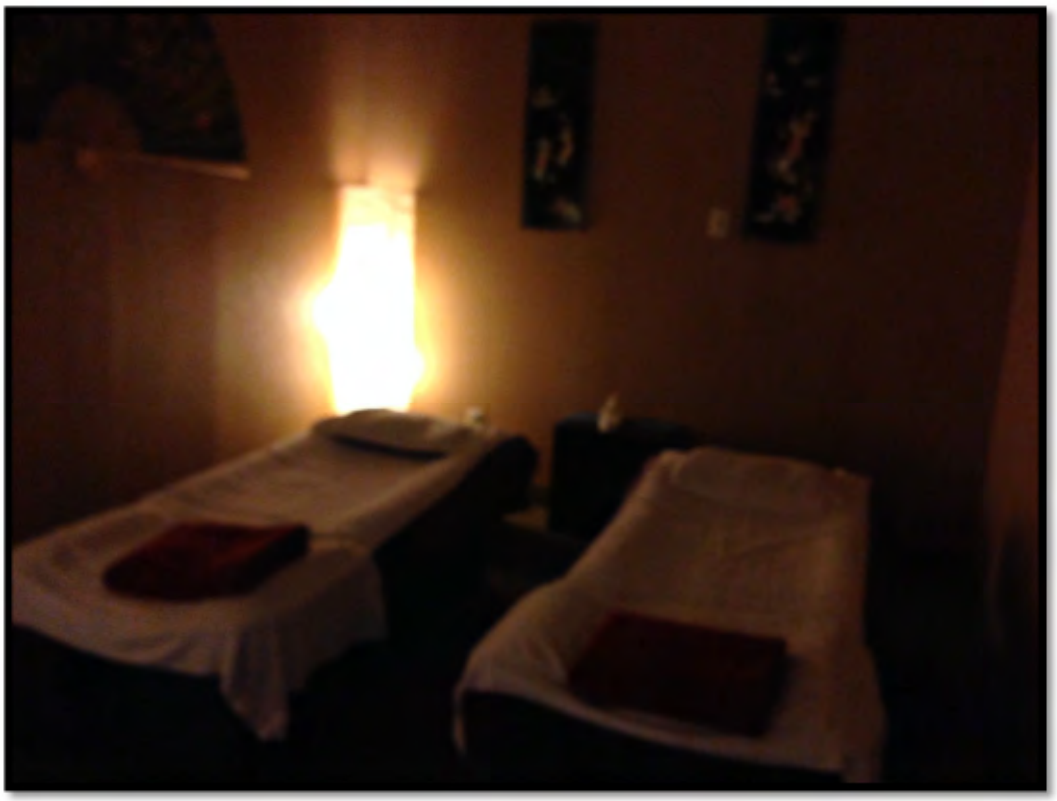

Enjoy Foot Spa

51\5 Rowlett Rd.,
Rowlett,TX,75088

We will operate as Foot ~~Massage~~ Reflexology in above address.The approximate of 1,460 sqt.

The hours of operation is from:Monday to Sunday,10:00AM to 10:00PM.

My contact number is:~~214-436-3976~~ or ~~469-359-0067~~. 626-417-3921

My contact name is :~~Huizhu Pu or Shirui Zhu.~~ Xiao Dong

My contact Email address is: rayzhu19850624@gmail.com .

Owner of business: Xiao Dong ~~Hui zhu Pu~~

ATTACHMENT 2

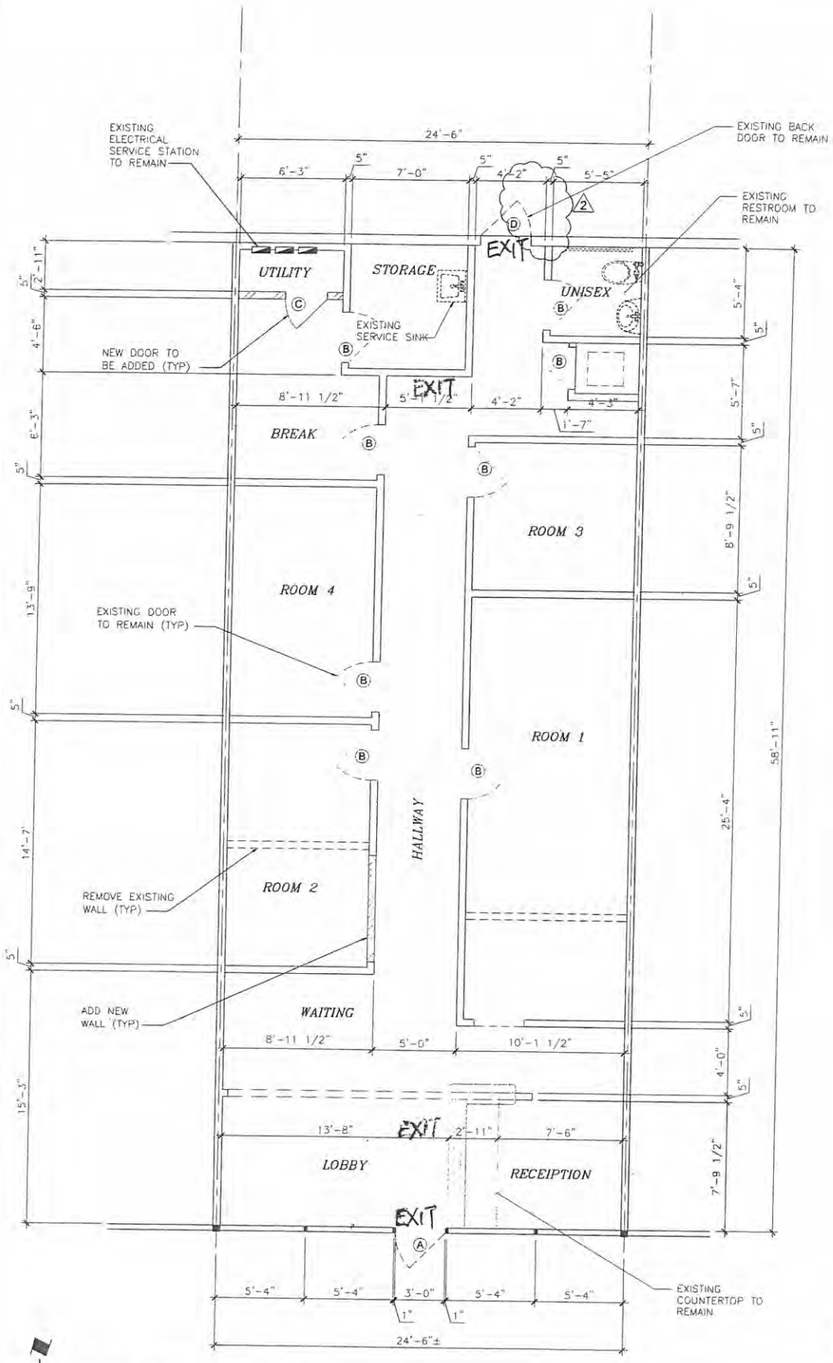

01 FLOOR PLAN
SCALE: 1/4" = 1'-0" [SUITE 1515]

GENERAL NOTES:

1. CONTRACTOR SHOULD VERIFY ALL EXISTING CONDITIONS AND DIMENSIONS PRIOR TO THE START OF CONSTRUCTION.
2. ANY DISCREPANCY BETWEEN THE DRAWINGS AND ACTUAL SITE CONDITIONS SHALL BE BROUGHT TO THE ATTENTION OF THE DESIGNER AND THE BUSINESS OWNER PRIOR TO PROCEEDING WITH THE WORK. THE CONTRACTOR IS RESPONSIBLE FOR CORRECTING ANY ERRORS AFTER THE START OF CONSTRUCTION.
3. THE CONTRACTOR IS RESPONSIBLE FOR PROTECTING ANY ON-SITE UTILITIES FROM DAMAGE DURING CONSTRUCTION.
4. DO NOT SCALE DRAWING IF THE PLANS ARE NOT FULL SIZE PAPER. WRITTEN DIMENSIONS TAKE PRECEDENCE OVER SCALE DIMENSIONS.
5. TEMPORARY POWER, WATER, AND TEMPORARY TOILET FACILITIES, PARKING AND OTHER STORAGE SHALL BE PROVIDED BY THE OWNER.
6. ANY DRILLING OR NOTCHING ON STUDS FOR ELECTRICAL WIRING, UTILITY LINES, BRACING, ETC. SHALL CONFORM TO APPLICABLE CODE SECTIONS.

LEGENDS:

- EXISTING FRAMED WALL TO REMAIN (SITE VERIFY)
- EXISTING FRAMED WALL TO BE REMOVED (SITE VERIFY)
- PROPOSED INTERIOR PARTITION WALL UP TO CEILING
- EXISTING STROEFRONT WALL TO REMAIN

EXISTING AND NEW DOOR SCHEDULE

MARK	DOOR SIZE	QUANTITY	LOCATION	HARDWARE
A	3'-0" X 7'-0"	1	EXTERIOR - EXISTING FRONT ENTRANCE DOOR TO REMAIN	KEY LOCK, DOOR CLOSER, AND PANIC DEVICE
B	3'-0" X 7'-0"	8	INTERIOR - EXISTING WOOD FRAMED DOOR TO REMAIN	DOOR CLOSER, PRIVATE KEY FOR RESTROOM ONLY
C	2'-6" X 6'-8"	1	INTERIOR - NEW WOOD FRAMED DOOR - UTILITY ROOM	
D	3'-0" X 7'-0"	1	EXTERIOR - EXISTING STEEL BACK DOOR TO REMAIN	KEY LOCK, DOOR CLOSER, AND PANIC DEVICE
TOTAL		11		

NOTES:
1. CONSULTING WITH BUSINESS OWNER FOR INTERIOR FINISHING, DOOR HARDWARS, AND RESTROOM/BREAK ROOM/SERVICE ROOM PLUMBING FIXTURES.
2. ALL DOORS AND HARDWARS TO BE SELECTED AND INSTALLED PER LOCAL CODE REQUIREMENTS AND TAS-ADA SPECIFICATIONS.
3. ALL EXISTING STOREFRONT WINDOW WALL TO REMAIN.
4. IF ANY, ALL INTERIOR WINDOWS, GLASS WALLS, AND GLASS DOORS TO BE SAFETY GLAZING.
5. A DOOR HARDWARE REQUIRED PER TAS-ADA STANDARDS.
6. THE DOOR HARDWARE MAY BE FROM "SCHLAGE" LEVER MODEL 626 OR APPROVED EQUAL.

ROOM FINISH SCHEDULE

ROOM NAME	FLOOR	4" BASE	WALL	CEILING	REMARKS
LOBBY	CERAMIC TILE	TILE	DRYWALL & TEXT PLASTER	VINYL COATED SOLID AT 9'-0"	EXISTING
WAITING	CERAMIC TILE	TILE	DRYWALL & TEXT PLASTER	2X4 ACOUSTICAL TILE, 9'-0" AFF	EXISTING
RECEPTION	CERAMIC TILE	TILE	DRYWALL & TEXT PLASTER	2X4 ACOUSTICAL TILE, 9'-0" AFF	NEW FLOOR
ALL 4 ROOMS	CARPET	VINYL	DRYWALL & TEXT PLASTER	2X4 ACOUSTICAL TILE, 9'-0" AFF	EXISTING
HALLWAY	CARPET	VINYL	DRYWALL & TEXT PLASTER	2X4 ACOUSTICAL TILE, 9'-0" AFF	EXISTING
RESTROOM - UNISEX	CERAMIC TILE	TILE	4 FEET FRA WALL OR NEW CERAMIC TILED WALL	2X4 ACOUSTICAL TILE, 9'-0" AFF	VERIFY LOW WALL
BREAK/STORAGE/UTILITY	CERAMIC TILE	TILE	DRYWALL & TEXT PLASTER	2X4 ACOUSTICAL TILE, 9'-0" AFF	FIELD VERIFY

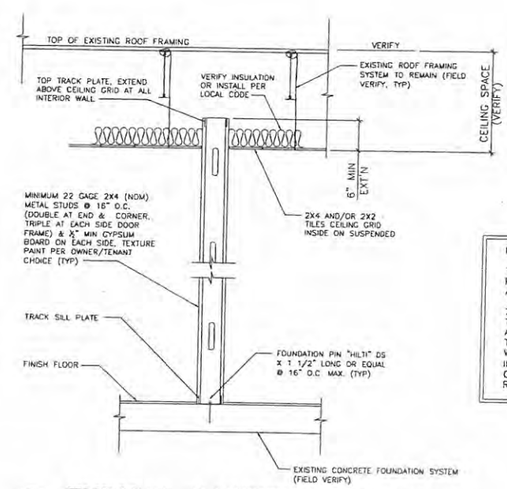

NOTES PER IBC 2009 SECTIONS:

712.3.1.1 FIRE-RESISTANCE-RATED ASSEMBLIES. PENETRATIONS SHALL BE INSTALLED AS TESTED IN AN APPROVED FIRE-RESISTANCE-RATED ASSEMBLY.

712.3.1.2 THROUGH-PENETRATION FIRESTOP SYSTEM. THROUGH PENETRATIONS SHALL BE PROTECTED BY AN APPROVED PENETRATION FIRESTOP SYSTEM INSTALLED AS TESTED IN ACCORDANCE WITH ASTM E 814 OR UL 1479, WITH A MINIMUM POSITIVE PRESSURE DIFFERENTIAL OF 0.01 INCH (2.49 Pa) OF WATER AND SHALL HAVE AN F RATING OF NOT LESS THAN THE REQUIRED FIRE-RESISTANCE RATING OF THE WALL PENETRATED.

A TYPICAL PARTITION WALL SECTION
NOT TO SCALE

NOTES:
1. EXISTING LIGHTING AND FIXTURES TO REMAIN.
2. EXISTING POWER OUTLETS ON THE WALL/CEILING TO REMAIN.
3. EXISTING H.V.A.C. SYSTEM AT SUITE TO REMAIN.
4. EXISTING PLUMBING LINE AND FIXTURES, INCLUDING RESTROOM AND FACILITIES, TO REMAIN.

B C STRUCTURAL ENGINEERS, LLC
- Consulting - Planning
- Design - Forensic Evaluation
- Construction Support

957 Falcon Drive
Allen, TX 75013
PHONE: (214) 991-5117
FAX: (214) 302-0727
Email: steven_bai66@yahoo.com

COPYRIGHT RESERVED

These drawings, as instruments of service, are exclusive property of B C Structural Engineers, LLC, and are not to be used in whole or part without the expressed written permission of B C Structural Engineers, LLC. Unauthorized use of these drawings will be prosecuted.

TENANT IMPROVEMENT PROJECT FOR:

ENJOY FOOT SPA

5115 ROWLETT ROAD, ROWLETT, TX 75088

STATE OF TEXAS
XUESONG BAI
89538
REGISTERED PROFESSIONAL ENGINEER
02/21/2013

Registration: TX #F-10942

REVISIONS

NO.	DATE	DESCRIPTION

ISSUE DATE FOR PERMIT
02/21/13

PROJECT NO.
2013-28B-01

DESCRIPTION
FLOOR PLAN

SHEET
A-1

ATTACHMENT 3

Rowlett
TEXAS

Department of
Development Services

NOTICE OF PUBLIC HEARING

MAY 2 6 2014

TO: Property Owner

RE: Application for a Special Use Permit

LOCATION: A 1,500+/- square foot existing lease space at 5101 Rowlett Road, Suite 5115, being part of a 2.96 acre portion of Tract 6.2 in the U Matthusen Survey, Abstract No. 1017, Page 470, City of Rowlett, Dallas County, Texas. A location map depicting a 200-ft notification area is attached for reference. This notice and the notification area are required under Chapter 211.007 of the Texas Local Government Code.

EXPLANATION OF REQUEST: The applicant requests a Special Use Permit (SUP) to operate a foot spa, considered a "Spa or massage establishment" by the Rowlett Development Code at the subject property. (SUP14-714)

- [x] I AM IN FAVOR OF THE REQUEST FOR THE FOLLOWING REASONS:
- [ ] I AM OPPOSED TO THE REQUEST FOR THE FOLLOWING REASONS:

COMMENTS: I am in favor for foot spa only. not a massage Parlor.

SIGNATURE: [illegible] 6-3-14

ADDRESS: 5408 [illegible] 11:30 AM

Your written comments are being solicited in the above case. Additional information is available in the Department of Development Services located at 3901 Main Street. The Planning and Zoning Commission of the City of Rowlett, Texas, will hold a public hearing at 7:00 p.m. on June 10, 2014, and that the City Council will hold a public hearing at 7:30 p.m. on July 1, 2014, both at the Municipal Center, 4000 Main Street, Rowlett, Texas.

Please legibly respond in ink. If the signature and/or address are missing, your comments will not be recorded. Your response must be received in the Planning Department by 5 pm on Wednesday, June 4, 2014, for your comments to be included in the Planning and Zoning Commission packet. All responses received by June 25, 2014, will be forwarded to the City Council as well; it is not necessary to respond twice. Responses received after the times noted above shall not be counted in the record of responses.

Any owner of property subject to a proposed rezoning or affected by a proposed rezoning may protest the rezoning by filing a written protest (this form is sufficient with the Director of Development Services within the time specified above. The protest shall object to the zoning map amendment, contain a legal description of the property on behalf of which the protest is made, and be signed by the owner of the property. If protest in the form of opposition are received from property owners within 200 feet of the subject property, and the property owners own a combined minimum of 20 percent or more of the land area, approval by the City Council shall only occur with a concurring vote of at least three-fourths of the full membership of the City Council.

If you have any questions concerning this request, please contact the Planning Division	RETURN BY FAX OR MAIL
Phone 972-412-6166 FAX 972-412-6228 glangford@rowlett.com	City of Rowlett Development Services PO Box 99 Rowlett, TX 75030-0099

City of Rowlett

Staff Report

4000 Main Street
P.O. Box 99
Rowlett, TX 75030-0099
www.rowlett.com

AGENDA DATE: 07/01/14 **AGENDA ITEM**: 8E

TITLE

Consider an ordinance authorizing the issuance of City of Rowlett, Texas General Obligation Refunding Bonds; establishing procedures for the sale and delivery of the bonds; providing for an effective date; and enacting other provisions relating to the subject.

STAFF REPRESENTATIVE

Brian Funderburk, City Manager
Alan Guard, Chief Financial Officer

SUMMARY

American Golf Corporation and the City of Rowlett desire to make revisions in the current lease agreement for the operation of the Waterview Golf Course, and a concurrent restructuring of the debt related to the golf course. This item for Council consideration is the ordinance authorizing the issuance of refunding bonds for the remaining portion of the 1997A variable rate General Obligation Bonds.

This ordinance also designates the city manager or chief financial officer as the “Pricing Officer” and authorizes either of them to act on behalf of the City in selling and delivering the bonds based on specific provisions and terms specified in the Pricing Certificate. This will allow for this competitive sale to occur on July 9, 2014, in order to meet specific deadlines related to the 1997A bonds.

BACKGROUND INFORMATION

On September 1, 1999, the City of Rowlett entered into a lease agreement for Waterview Golf Course with American Golf Corporation (AGC). Among other things, the lease calls for AGC to manage the golf course and provides for a schedule of rental payments. These payments were originally designed around the anticipated annual debt on the bonds issued to build the course and contained an escalation over time. In June, AGC proposed to restructure the bonds at their cost. The proposal includes the complete defeasement of the 2010A bonds from a contribution of $1.19 million and the restructuring of the 1997A bonds from a contribution of $1.0 million that would reduce the total debt and extend the life to 25 years. The defeasement of the 2010A bonds and the restructuring of the 1997A bonds would result in annual payments of approximately $250,000-$255,000 per year and AGC has requested that their annual rental payment be reset to match the payment of the bonds.

The current lease represents a 30 year agreement beginning May 1, 2000, and ending December 31, 2030. The agreement provides for two additional five-year lease terms at option of Lessee. If exercised, the lease could be extended through the end of December 31, 2040.

This item for Council consideration is the ordinance authorizing the issuance of refunding bonds for the remaining portion of the 1997A variable rate General Obligation Bonds.

This ordinance also designates the city manager or chief financial officer as the “Pricing Officer” and authorizes either of them to act on behalf of the City in selling and delivering the bonds based on specific provisions and terms specified in the Pricing Certificate. This will allow for this competitive sale to occur on July 9, 2014, in order to meet specific deadlines related to the 1997A bonds.

DISCUSSION

Regarding the refunding of the 2010A and 1997A General Obligation Bonds, American Golf has made a proposal to the City to defease the 2010A bonds and refinance the 1997A bonds in order to reduce the annual payment, establish budget certainty and eliminate the risk of increasing interest rates. This refunding will extend the original term of the debt by 13 years. This refunding will be done as part of an overall package that includes improvements at the Waterview Golf Course, extension of the current contract with American Golf, and a commitment by American Golf to provide funds on an annual basis for future improvements at the golf course.

AGC has asked the City to consider restructuring the 1999 lease agreement. The terms of the proposal are as follows:

- AGC will invest $2.19M as follows:
  - $1.19M to completely defease the outstanding 2010A bonds.
  - $1.0M to buy down principal on 1997A bonds and restructure and extend the term for 25 years.
- City will modify rental income to match the new debt service schedule.
- AGC will exercise the option to extend agreement coterminous with new 25-year bond term. This will end their term on August 15, 2039.
- AGC will invest $75,000 to upgrade kitchen and appurtenances (i.e. tables, chairs, linens, etc). In addition, AGC will invest $139,618 to complete improvements to the clubhouse.
- AGC will set aside 3% of annual revenue into a CapEx fund for future improvements.

On May 20, 2014, City staff presented a recommended list of projects from the Golf Advisory Board as well as the funding strategy. This list totaled $830,448, which would be funded by a combination of contributions from the Waterview HOA, existing funds in the Golf Fund, and a three-year note for the remaining balance. Under AGC’s proposal, alternate #1 from the clubhouse totaling $147,056 will be removed, the City’s portion in cash from the Golf Fund would increase by $172,682 and AGC would cover the balance of $139,618 with no financing necessary. In addition, the City will retain a reserve totaling $255,000, equivalent to one-year debt service.

The proposed amendment to the lease agreement, also on tonight’s agenda, will reduce the average annual debt service from $455,000 based on the current schedule to about $250,000-$255,000 a year. It will also extend the remaining debt from the 14 years remaining to 25 years.

In order to meet specific deadlines related to the refunding of the 1997A General Obligation Bonds for the golf course, City Council will consider this ordinance setting pricing parameters, which will allow for the sale of the refunding bonds through a competitive bid process to occur on July 9, 2014, and authorize the city manager or chief financial officer as the "Pricing Officer". The proceeds of the refunding bonds plus an American Golf contribution will be used to discharge the 1997A General Obligation Bonds. This ordinance has been prepared by the City's bond counsel.

FINANCIAL/BUDGET IMPLICATIONS

The City will be required to defease the 2010A bonds and refinance the 1997A bonds based on the $2.19 million in contributions from American Golf. The overall annual debt service will drop to about $250,000-$255,000.

RECOMMENDED ACTION

Council approve the ordinance authorizing the issuance of City of Rowlett, Texas General Obligation Refunding Bonds; establishing procedures for the sale and delivery of the bonds; providing for an effective date; and enacting other provisions relating to the subject.

ATTACHMENT

Exhibit A – Rowlett GO Ref 2014 – Bond Ordinance

EXHIBIT A

ORDINANCE NO. ___

ORDINANCE AUTHORIZING THE ISSUANCE OF CITY OF ROWLETT, TEXAS, GENERAL OBLIGATION REFUNDING BONDS; ESTABLISHING PROCEDURES FOR THE SALE AND DELIVERY OF THE BONDS; PROVIDING AN EFFECTIVE DATE; AND ENACTING OTHER PROVISIONS RELATING TO THE SUBJECT

THE STATE OF TEXAS	§
COUNTIES OF DALLAS AND ROCKWALL	§
CITY OF ROWLETT	§

WHEREAS, there are presently the outstanding obligations of the City of Rowlett, Texas (the "Issuer") described in Schedule I attached hereto, collectively, the "Eligible Refunded Obligations";

WHEREAS, the Issuer now desires to refund all or part of the Eligible Refunded Obligations, and those Eligible Refunded Obligations designated by the Pricing Officer in the Pricing Certificate, each as defined below, to be refunded are herein referred to as the "Refunded Obligations";

WHEREAS, Chapter 1207, Texas Government Code, authorizes the Issuer to issue refunding bonds and to deposit the proceeds from the sale thereof, together with any other available funds or resources, directly with a paying agent for any of the Refunded Obligations or a trust company or commercial bank that does not act as a depository for the Issuer and is named in these proceedings, and such deposit, if made before the payment dates of the Refunded Obligations, shall constitute the making of firm banking and financial arrangements for the discharge and final payment of the Refunded Obligations;

WHEREAS, Chapter 1207, Texas Government Code, further authorizes the Issuer to enter into an escrow or similar agreement with such paying agent for the Refunded Obligations or trust company or commercial bank with respect to the safekeeping, investment, reinvestment, administration and disposition of any such deposit, upon such terms and conditions as the Issuer and such paying agent or trust company or commercial bank may agree;

WHEREAS, this City Council hereby finds and determines that it is a public purpose and in the best interests of the Issuer to refund the Refunded Obligations in order to restructure the outstanding debt service payments of the Issuer, to replace variable rate and other covenants in the ordinance authorizing the variable rate Refunded Obligations with fixed rate interest cost, and hereby further finds and determines that the manner in which the refunding is being executed, in that the pricing and terms of the bonds hereinafter authorized are to be determined at a future date pursuant to the provisions of this Ordinance and that the variable rate Refunded Obligations bear interest at a variable rate, does not make it practicable to determine the amount of debt service loss or debt service savings that will result from the refunding of the Refunded Obligations;

WHEREAS, all the Refunded Obligations mature or are subject to redemption prior to maturity within 20 years of the date of the bonds hereinafter authorized;

WHEREAS, the bonds hereafter authorized are being issued and delivered pursuant to said Chapter 1207, Texas Government Code; and

WHEREAS, it is officially found, determined, and declared that the meeting at which this Ordinance

has been adopted was open to the public and public notice of the time, place and subject matter of the public business to be considered and acted upon at said meeting, including this Ordinance, was given, all as required by the applicable provisions of Tex. Gov't Code Ann. ch. 551; Now, Therefore

BE IT ORDAINED BY THE CITY COUNCIL OF THE CITY OF ROWLETT, TEXAS:

SECTION 1. RECITALS, AMOUNT, PURPOSE AND DESIGNATION OF THE BONDS.

(a) The recitals set forth in the preamble hereof are incorporated herein and shall have the same force and effect as if set forth in this Section.

(b) The bonds of the Issuer are hereby authorized to be issued and delivered in the aggregate principal amount hereinafter provided for the public purpose of providing funds to refund a portion of the Issuer's outstanding indebtedness and to pay the costs incurred in connection with the issuance of the Bonds.

(c) Each bond issued pursuant to this Ordinance shall be designated: "CITY OF ROWLETT, TEXAS, GENERAL OBLIGATION REFUNDING BOND, TAXABLE SERIES 2014," and initially there shall be issued, sold, and delivered hereunder fully registered Bonds, without interest coupons, payable to the respective registered owners thereof (with the initial bonds being made payable to the initial purchaser as described in Section 10 hereof), or to the registered assignee or assignees of said bonds or any portion or portions thereof (in each case, the "Registered Owner"). The Bonds shall be in the respective denominations and principal amounts, shall be numbered, shall mature and be payable on the date or dates in each of the years and in the principal amounts, and shall bear interest to their respective dates of maturity or redemption prior to maturity at the rates per annum, as set forth in the Pricing Certificate.

SECTION 2. DELEGATION TO PRICING OFFICER.

(a) As authorized by Section 1207.007, Texas Government Code, as amended, the City Manager or Chief Financial Officer of the Issuer, or either of them (the "Pricing Officer"), are hereby authorized to act on behalf of the Issuer in selling and delivering the Bonds, determining which of the Eligible Refunded Obligations shall be refunded and carrying out the other procedures specified in this Ordinance, including, determining the date of the Bonds, any additional or different designation or title by which the Bonds shall be known, the price at which the Bonds will be sold, the years in which the Bonds will mature, the principal amount to mature in each of such years, the rate of interest to be borne by each such maturity, the interest payment and record dates, the price and terms upon and at which the Bonds shall be subject to redemption prior to maturity at the option of the Issuer, as well as any mandatory sinking fund redemption provisions, and all other matters relating to the issuance, sale, and delivery of the Bonds and the refunding of the Refunded Bonds, including without limitation establishing the redemption date for and effecting the redemption of the Refunded Obligations, if available, and/or procuring municipal bond insurance, including the execution of any commitment agreements, membership agreements in mutual insurance companies, and other similar agreements, for all or any portion of the Bonds and providing for the terms and provisions thereof applicable to the Bonds, all of which shall be specified in the Pricing Certificate; provided that:

(i) the aggregate original principal amount of the Bonds shall not exceed $5,000,000;

(ii) the true interest cost of the Bonds shall not exceed 6.00% per annum provided that the net effective interest rate on the Bonds shall not exceed the maximum rate set forth in Chapter 1204, Texas Government Code, as amended;

(iii) the final maturity of the Bonds may not be later than August 15, 2039; and

(v) the delegation made hereby shall expire if not exercised by the Pricing Officer on or before January 1, 2015.

(b) In establishing the aggregate principal amount of the Bonds, the Pricing Officer shall establish an amount not exceeding the amount authorized in Subsection (a) hereof, which shall be sufficient in amount to provide for the purposes for which the Bonds are authorized and to pay costs of issuing the Bonds. The Bonds shall be sold with and subject to such terms as set forth in the Pricing Certificate.

(c) The Pricing Officer shall determine whether the Bonds will be sold by private placement or negotiated or competitive sale. The term "Bonds" as used in this Ordinance shall mean and include collectively the bond initially issued and delivered pursuant to this Ordinance and all definitive or substitute bonds exchanged therefor, as well as all other substitute bonds and replacement bonds issued pursuant hereto, and the term "Bond" shall mean any of the Bonds, unless the context clearly indicates otherwise.

SECTION 3. CHARACTERISTICS OF THE BONDS.

(a) Registration, Transfer, Conversion and Exchange. The selection and appointment of the paying agent/registrar for the Bonds (the "Paying Agent/Registrar") shall be as provided in the Pricing Certificate. The Pricing Officer is authorized and directed to execute and deliver in the name and under the corporate seal and on behalf of the Issuer a Paying Agent/Registrar Agreement with the Paying Agent/Registrar in substantially the form presented at this meeting

(b) Registration, Transfer, Conversion and Exchange. The Issuer shall keep or cause to be kept at the corporate trust office of the Paying Agent/Registrar books or records for the registration of the transfer, conversion and exchange of the Bonds (the "Registration Books"), and the Issuer hereby appoints the Paying Agent/Registrar as its registrar and transfer agent to keep such books or records and make such registrations of transfers, conversions and exchanges under such reasonable regulations as the Issuer and Paying Agent/Registrar may prescribe; and the Paying Agent/Registrar shall make such registrations, transfers, conversions and exchanges as herein provided within three days of presentation in due and proper form. The Paying Agent/Registrar shall obtain and record in the Registration Books the address of the registered owner of each Bond to which payments with respect to the Bonds shall be mailed, as herein provided; but it shall be the duty of each registered owner to notify the Paying Agent/Registrar in writing of the address to which payments shall be mailed, and such interest payments shall not be mailed unless such notice has been given. The Issuer shall have the right to inspect the Registration Books during regular business hours of the Paying Agent/Registrar, but otherwise the Paying Agent/Registrar shall keep the Registration Books confidential and, unless otherwise required by law, shall not permit their inspection by any other entity. The Issuer shall pay the Paying Agent/Registrar's standard or customary fees and charges for making such registration, transfer, conversion, exchange and delivery of a substitute Bond or Bonds. Registration of assignments, transfers, conversions and exchanges of Bonds shall be made in the manner provided and with the effect stated in the FORM OF BOND set forth in this Ordinance. Each substitute Bond shall bear a letter and/or number to distinguish it from each other Bond.

(c) Authentication. Except as provided in subsection (i) of this section, an authorized representative of the Paying Agent/Registrar shall, before the delivery of any such Bond, date and manually sign said Bond, and no such Bond shall be deemed to be issued or outstanding unless such Bond is so executed. The Paying Agent/Registrar promptly shall cancel all paid Bonds and Bonds surrendered for conversion and exchange. No additional ordinances, orders or resolutions need be passed or adopted by the governing body of the Issuer or any other body or person so as to accomplish the foregoing conversion and exchange of any Bond or portion thereof, and the Paying Agent/Registrar shall provide for the printing, execution and delivery of the

substitute Bonds in the manner prescribed herein. Pursuant to Subchapter D, Chapter 1201, Texas Government Code, the duty of conversion and exchange of Bonds as aforesaid is hereby imposed upon the Paying Agent/Registrar, and, upon the execution of said Bond, the converted and exchanged Bond shall be valid, incontestable, and enforceable in the same manner and with the same effect as the Bonds which initially were issued and delivered pursuant to this Ordinance, approved by the Attorney General, and registered by the Comptroller of Public Accounts.

(d) Payment of Principal and Interest. The Issuer hereby further appoints the Paying Agent/Registrar to act as the paying agent for paying the principal of and interest on the Bonds, all as provided in this Ordinance. The Paying Agent/Registrar shall keep proper records of all payments made by the Issuer and the Paying Agent/Registrar with respect to the Bonds, and of all conversions and exchanges of Bonds, and all replacements of Bonds, as provided in this Ordinance. However, in the event of a nonpayment of interest on a scheduled payment date, and for thirty (30) days thereafter, a new record date for such interest payment (a "Special Record Date") will be established by the Paying Agent/Registrar, if and when funds for the payment of such interest have been received from the Issuer. Notice of the Special Record Date and of the scheduled payment date of the past due interest (which shall be 15 days after the Special Record Date) shall be sent at least five (5) business days prior to the Special Record Date by United States mail, first class postage prepaid, to the address of each registered owner appearing on the Registration Books at the close of business on the last business day next preceding the date of mailing of such notice.

(e) Payment to Registered Owner. Notwithstanding any other provision of this Ordinance to the contrary, the Issuer and the Paying Agent/Registrar shall be entitled to treat and consider the person in whose name each Bond is registered in the Registration Books as the absolute owner of such Bond for the purpose of payment of principal and interest with respect to such Bond, for the purpose of registering transfers with respect to such Bond, and for all other purposes whatsoever. The Paying Agent/Registrar shall pay all principal of and interest on the Bonds only to or upon the order of the registered owners, as shown in the Registration Books as provided in this Ordinance, or their respective attorneys duly authorized in writing, and all such payments shall be valid and effective to fully satisfy and discharge the Issuer's obligations with respect to payment of principal of and interest on the Bonds to the extent of the sum or sums so paid. No person other than a registered owner, as shown in the Registration Books, shall receive a Bond certificate evidencing the obligation of the Issuer to make payments of principal and interest pursuant to this Ordinance.

(f) Paying Agent/Registrar. The Issuer covenants with the registered owners of the Bonds that at all times while the Bonds are outstanding the Issuer will provide a competent and legally qualified bank, trust company, financial institution or other agency to act as and perform the services of Paying Agent/Registrar for the Bonds under this Ordinance, and that the Paying Agent/Registrar will be one entity. By accepting the position and performing as such, each Paying Agent/Registrar shall be deemed to have agreed to the provisions of this Ordinance, and a certified copy of this Ordinance shall be delivered to each Paying Agent/Registrar.

(g) Substitute Paying Agent/Registrar. The Issuer reserves the right to, and may, at its option, change the Paying Agent/Registrar upon not less than 120 days written notice to the Paying Agent/Registrar, to be effective not later than 60 days prior to the next principal or interest payment date after such notice. In the event that the entity at any time acting as Paying Agent/Registrar (or its successor by merger, acquisition, or other method) should resign or otherwise cease to act as such, the Issuer covenants that promptly it will appoint a competent and legally qualified bank, trust company, financial institution, or other agency to act as Paying Agent/Registrar under this Ordinance. Upon any change in the Paying Agent/Registrar, the previous Paying Agent/Registrar promptly shall transfer and deliver the Registration Books (or a copy thereof), along with all other pertinent books and records relating to the Bonds, to the new Paying Agent/Registrar designated and appointed by the Issuer. Upon any change in the Paying Agent/Registrar,

the Issuer promptly will cause a written notice thereof to be sent by the new Paying Agent/Registrar to each registered owner of the Bonds, by United States mail, first-class postage prepaid, which notice also shall give the address of the new Paying Agent/Registrar.

(g) Book-Entry Only System. The Bonds issued in exchange for the Bonds initially issued to the purchaser or purchasers specified herein shall be initially issued in the form of a separate single fully registered Bond for each of the maturities thereof and the ownership of each such Bond shall be registered in the name of Cede & Co., as nominee of The Depository Trust Company of New York ("DTC"), and except as provided in subsections (i) and (j) of this Section, all of the outstanding Bonds shall be registered in the name of Cede & Co., as nominee of DTC.

(h) Blanket Letter of Representations. The previous execution and delivery of the Blanket Letter of Representations with respect to obligations of the Issuer is hereby ratified and confirmed; and the provisions thereof shall be fully applicable to the Bonds. Notwithstanding anything to the contrary contained herein, while the Bonds are subject to DTC's Book-Entry Only System and to the extent permitted by law, the Letter of Representations is hereby incorporated herein and its provisions shall prevail over any other provisions of this Ordinance in the event of conflict.

(i) Bonds Registered in the Name of Cede & Co. With respect to Bonds registered in the name of Cede & Co., as nominee of DTC, the Issuer and the Paying Agent/Registrar shall have no responsibility or obligation to any securities brokers and dealers, banks, trust companies, clearing corporations and certain other organizations on whose behalf DTC was created ("DTC Participant") to hold securities to facilitate the clearance and settlement of securities transactions among DTC Participants or to any person on behalf of whom such a DTC Participant holds an interest in the Bonds. Without limiting the immediately preceding sentence, the Issuer and the Paying Agent/Registrar shall have no responsibility or obligation with respect to (i) the accuracy of the records of DTC, Cede & Co. or any DTC Participant with respect to any ownership interest in the Bonds, (ii) the delivery to any DTC Participant or any other person, other than a registered owner of Bonds, as shown on the Registration Books, of any notice with respect to the Bonds, or (iii) the payment to any DTC Participant or any other person, other than a registered owner of Bonds, as shown in the Registration Books of any amount with respect to principal of or interest on the Bonds. Upon delivery by DTC to the Paying Agent/Registrar of written notice to the effect that DTC has determined to substitute a new nominee in place of Cede & Co., and subject to the provisions in this Ordinance with respect to interest checks being mailed to the registered owner at the close of business on the Record date, the words "Cede & Co." in this Ordinance shall refer to such new nominee of DTC.

(j) Successor Securities Depository; Transfers Outside Book-Entry Only System. In the event that the Issuer determines that DTC is incapable of discharging its responsibilities described herein and in the representation letter of the Issuer to DTC or that it is in the best interest of the beneficial owners of the Bonds that they be able to obtain certificated Bonds, the Issuer shall (i) appoint a successor securities depository, qualified to act as such under Section 17A of the Securities and Exchange Act of 1934, as amended, notify DTC and DTC Participants of the appointment of such successor securities depository and transfer one or more separate Bonds to such successor securities depository or (ii) notify DTC and DTC Participants of the availability through DTC of Bonds and transfer one or more separate Bonds to DTC Participants having Bonds credited to their DTC accounts. In such event, the Bonds shall no longer be restricted to being registered in the Registration Books in the name of Cede & Co., as nominee of DTC, but may be registered in the name of the successor securities depository, or its nominee, or in whatever name or names registered owners transferring or exchanging Bonds shall designate, in accordance with the provisions of this Ordinance.

(k) Payments to Cede & Co. Notwithstanding any other provision of this Ordinance to the contrary, so long as any Bond is registered in the name of Cede & Co., as nominee of DTC, all payments with respect

to principal of and interest on such Bond and all notices with respect to such Bond shall be made and given, respectively, in the manner provided in the representation letter of the Issuer to DTC.

(l) General Characteristics of the Bonds. The Bonds (i) shall be issued in fully registered form, without interest coupons, with the principal of and interest on such Bonds to be payable only to the Registered Owners thereof, (ii) may and shall be redeemed prior to their scheduled maturities, (iii) may be transferred and assigned, (iv) may be converted and exchanged for other Bonds, (v) shall have the characteristics, (vi) shall be signed, sealed, executed and authenticated, (vii) the principal of and interest on the Bonds shall be payable, and (viii) shall be administered and the Paying Agent/Registrar and the Issuer shall have certain duties and responsibilities with respect to the Bonds, all as provided, and in the manner and to the effect as required or indicated, in the FORM OF BOND set forth in this Ordinance. The Bonds initially issued and delivered pursuant to this Ordinance is not required to be, and shall not be, authenticated by the Paying Agent/Registrar, but on each substitute Bond issued in conversion of and exchange for any Bond or Bonds issued under this Ordinance the Paying Agent/Registrar shall execute the Paying Agent/registrar's Authentication Bond, in the FORM OF BOND set forth in this Ordinance.

(m) Cancellation of Initial Bond. On the closing date, one initial Bond representing the entire principal amount of the Bonds, payable in stated installments to the order of the initial purchaser of the Bonds or its designee, executed by manual or facsimile signature of the Mayor and City Secretary, approved by the Attorney General of Texas, and registered and manually signed by the Comptroller of Public Accounts of the State of Texas, will be delivered to such purchaser or its designee. Upon payment for the initial Bond, the Paying Agent/Registrar shall insert the Issuance Date on Bond No. T-1, cancel each of the initial Bonds and deliver to The Depository Trust Company ("DTC") on behalf of such purchaser one registered definitive Bond for each year of maturity of the Bonds, in the aggregate principal amount of all of the Bonds for such maturity, registered in the name of Cede & Co., as nominee of DTC. To the extent that the Paying Agent/Registrar is eligible to participate in DTC's FAST System, pursuant to an agreement between the Paying Agent/Registrar and DTC, the Paying Agent/Registrar shall hold the definitive Bonds in safekeeping for DTC.

SECTION 4. FORM OF BONDS. The form of the Bonds, including the form of Paying Agent/Registrar's Authentication Certificate, the form of Assignment and the form of Registration Certificate of the Comptroller of Public Accounts of the State of Texas to be attached to the Bonds initially issued and delivered pursuant to this Ordinance, shall be, respectively, substantially as follows, with such appropriate variations, omissions or insertions as are permitted or required by this Ordinance, and with the Bonds to be completed with information set forth in the Pricing Certificate.

(a) Form of Bond.

NO. R-

UNITED STATES OF AMERICA
STATE OF TEXAS

PRINCIPAL AMOUNT
$_____

CITY OF ROWLETT, TEXAS
GENERAL OBLIGATION REFUNDING BOND
TAXABLE SERIES 2014

INTEREST RATE	DATE OF BONDS	MATURITY DATE	CUSIP NO.
_____	_____	_____	_____

REGISTERED OWNER:

PRINCIPAL AMOUNT: DOLLARS

ON THE MATURITY DATE specified above, the City of Rowlett, in Dallas and Rockwall Counties, Texas (the "Issuer"), being a political subdivision and municipal corporation of the State of Texas, hereby promises to pay to the Registered Owner specified above, or registered assigns (hereinafter called the "Registered Owner"), on the Maturity Date specified above, the Principal Amount specified above. The Issuer promises to pay interest on the unpaid principal amount hereof (calculated on the basis of a 360-day year of twelve 30-day months) from _____, _____ at the Interest Rate per annum specified above. Interest is payable on _____, ____ and semiannually on each _____ and _____ thereafter to the Maturity Date specified above, or the date of redemption prior to maturity; except, if this Bond is required to be authenticated and the date of its authentication is later than the first Record Date (hereinafter defined), such principal amount shall bear interest from the interest payment date next preceding the date of authentication, unless such date of authentication is after any Record Date but on or before the next following interest payment date, in which case such principal amount shall bear interest from such next following interest payment date; provided, however, that if on the date of authentication hereof the interest on the Bond or Bonds, if any, for which this Bond is being exchanged is due but has not been paid, then this Bond shall bear interest from the date to which such interest has been paid in full.

THE PRINCIPAL OF AND INTEREST ON this Bond are payable in lawful money of the United States of America, without exchange or collection charges. The principal of this Bond shall be paid to the registered owner hereof upon presentation and surrender of this Bond at maturity, or upon the date fixed for its redemption prior to maturity, at the principal corporate trust office of _____, _____, Texas, which is the "Paying Agent/Registrar" for this Bond. The payment of interest on this Bond shall be made by the Paying Agent/Registrar to the registered owner hereof on each interest payment date by check or draft, dated as of such interest payment date, drawn by the Paying Agent/Registrar on, and payable solely from, funds of the Issuer required by the ordinance authorizing the issuance of this Bond (the "Bond Ordinance") to be on deposit with the Paying Agent/Registrar for such purpose as hereinafter provided; and such check or draft shall be sent by the Paying Agent/Registrar by United States mail, first-class postage prepaid, on each such interest payment date, to the registered owner hereof, at its address as it appeared on the _____ day of the month preceding each such date (the "Record Date") on the Registration Books kept by the Paying Agent/Registrar, as hereinafter described. In addition, interest may be paid by such other method, acceptable to the Paying Agent/Registrar, requested by, and at the risk and expense of, the registered owner. In the event of a non-payment of interest on a scheduled payment date, and for 30 days thereafter, a new record date for such interest payment (a "Special Record Date") will be established by the Paying Agent/Registrar, if and when funds for the payment of such interest have been received from the Issuer. Notice of the Special Record Date and of the scheduled payment date of the past due interest (which shall be 15 days after the Special Record Date) shall be sent at least five business days prior to the Special Record Date by United States mail, first-class postage prepaid, to the address of each owner of a Bond appearing on the Registration Books at the close of business on the last business day next preceding the date of mailing of such notice.

ANY ACCRUED INTEREST due at maturity or upon the redemption of this Bond prior to maturity as provided herein shall be paid to the registered owner upon presentation and surrender of this Bond for payment or redemption at the principal corporate trust office of the Paying Agent/Registrar. The Issuer covenants with the registered owner of this Bond that on or before each principal payment date and interest payment date for this Bond it will make available to the Paying Agent/Registrar, from the "Interest and Sinking Fund" created by the Bond Ordinance, the amounts required to provide for the payment, in immediately available funds, of all principal of and interest on the Bonds, when due.

IF THE DATE for any payment of the principal of or interest on this Bond shall be a Saturday,

Sunday, a legal holiday or a day on which banking institutions in the city where the principal corporate trust office of the Paying Agent/Registrar is located are authorized by law or executive order to close, then the date for such payment shall be the next succeeding day that is not such a Saturday, Sunday, legal holiday or day on which banking institutions are authorized to close; and payment on such date shall have the same force and effect as if made on the original date payment was due.

THIS BOND is one of a series of Bonds dated _____, _____, authorized in accordance with the Constitution and laws of the State of Texas in the principal amount of $_____ for the public purposes of refunding certain outstanding obligations of the Issuer, and to pay the costs incurred in connection with the issuance of the Bonds.

ON _____, or on any date thereafter, the Bonds of this series may be redeemed prior to their scheduled maturities, at the option of the Issuer, with funds derived from any available and lawful source, as a whole, or in part, and, if in part, the particular Bonds, or portions thereof, to be redeemed shall be selected and designated by the Issuer (provided that a portion of a Bond may be redeemed only in an integral multiple of $5,000), at a redemption price equal to the principal amount to be redeemed plus accrued interest to the date fixed for redemption.

THE BONDS scheduled to mature on _____ in the years ____ and ____ (the "Term Bonds") are subject to scheduled mandatory redemption by the Paying Agent/Registrar by lot, or by any other customary method that results in a random selection, at a price equal to the principal amount thereof, plus accrued interest to the redemption date, out of moneys available for such purpose in the interest and sinking fund for the Bonds, on the dates and in the respective principal amounts, set forth in the following schedule:

Term Bond Maturity: _____, ____		Term Bond Maturity: _____, ____	
Mandatory Redemption Date	Principal Amount	Mandatory Redemption Date	Principal Amount
_____, ____	$_____	_____, ____	$_____
_____, ____	_____	_____, ____	_____
_____, ____ (maturity)	_____	_____, ____ (maturity)	_____

The principal amount of Term Bonds of a stated maturity required to be redeemed on any mandatory redemption date pursuant to the operation of the mandatory sinking fund redemption provisions shall be reduced, at the option of the Issuer, by the principal amount of any Term Bonds of the same maturity which, at least 50 days prior to a mandatory redemption date (1) shall have been acquired by the Issuer at a price not exceeding the principal amount of such Term Bonds plus accrued interest to the date of purchase thereof, and delivered to the Paying Agent/Registrar for cancellation, (2) shall have been purchased and canceled by the Paying Agent/Registrar at the request of the Issuer at a price not exceeding the principal amount of such Term Bonds plus accrued interest to the date of purchase, or (3) shall have been redeemed pursuant to the optional redemption provisions and not theretofore credited against a mandatory redemption requirement.

IF AT THE TIME OF MAILING of notice of optional redemption there shall not have either been deposited with the Paying Agent/Registrar or legally authorized escrow agent immediately available funds sufficient to redeem all the Bonds called for redemption, such notice may state that it is conditional, and is subject to the deposit of the redemption moneys with the Paying Agent/Registrar or legally authorized escrow agent at or prior to the redemption date. If such redemption is not effectuated, the Paying Agent/Registrar shall, within five days thereafter, give notice in the manner in which the notice of redemption was given that such moneys were not so received and shall rescind the redemption.

AT LEAST 30 days prior to the date fixed for any redemption of Bonds or portions thereof prior to maturity a written notice of such redemption shall be sent by the Paying Agent/Registrar by United States mail, first-class postage prepaid, at least 30 days prior to the date fixed for any such redemption, to the registered owner of each Bond to be redeemed at its address as it appeared on the 45th day prior to such redemption date; provided, however, that the failure of the registered owner to receive such notice, or any defect therein or in the sending or mailing thereof, shall not affect the validity or effectiveness of the proceedings for the redemption of any Bond. By the date fixed for any such redemption due provision shall be made with the Paying Agent/Registrar for the payment of the required redemption price for the Bonds or portions thereof that are to be so redeemed. If such written notice of redemption is sent and if due provision for such payment is made, all as provided above, the Bonds or portions thereof that are to be so redeemed thereby automatically shall be treated as redeemed prior to their scheduled maturities, and they shall not bear interest after the date fixed for redemption, and they shall not be regarded as being outstanding except for the right of the registered owner to receive the redemption price from the Paying Agent/Registrar out of the funds provided for such payment. If a portion of any Bond shall be redeemed, a substitute Bond or Bonds having the same maturity date, bearing interest at the same rate, in any denomination or denominations in any integral multiple of $5,000, at the written request of the registered owner, and in aggregate principal amount equal to the unredeemed portion thereof, will be issued to the registered owner upon the surrender thereof for cancellation, at the expense of the Issuer, all as provided in the Bond Ordinance.

ALL BONDS OF THIS SERIES are issuable solely as fully registered bonds, without interest coupons, in the denomination of any integral multiple of $5,000. As provided in the Bond Ordinance, this Bond may, at the request of the registered owner or the assignee or assignees hereof, be assigned, transferred, converted into and exchanged for a like aggregate principal amount of fully registered Bonds, without interest coupons, payable to the appropriate registered owner, assignee or assignees, as the case may be, having the same denomination or denominations in any integral multiple of $5,000 as requested in writing by the appropriate registered owner, assignee or assignees, as the case may be, upon surrender of this Bond to the Paying Agent/Registrar for cancellation, all in accordance with the form and procedures set forth in the Bond Ordinance. Among other requirements for such assignment and transfer, this Bond must be presented and surrendered to the Paying Agent/Registrar, together with proper instruments of assignment, in form and with guarantee of signatures satisfactory to the Paying Agent/Registrar, evidencing assignment of this Bond or any portion or portions hereof in any integral multiple of $5,000 to the assignee or assignees in whose name or names this Bond or any such portion or portions hereof is or are to be registered. The form of Assignment printed or endorsed on this Bond may be executed by the registered owner to evidence the assignment hereof, but such method is not exclusive, and other instruments of assignment satisfactory to the Paying Agent/Registrar may be used to evidence the assignment of this Bond or any portion or portions hereof from time to time by the registered owner. The Paying Agent/Registrar's reasonable standard or customary fees and charges for assigning, transferring, converting and exchanging any Bond or portion thereof will be paid by the Issuer. In any circumstance, any taxes or governmental charges required to be paid with respect thereto shall be paid by the one requesting such assignment, transfer, conversion or exchange, as a condition precedent to the exercise of such privilege. The Paying Agent/Registrar shall not be required to make any such transfer, conversion, or exchange (i) during the period commencing with the close of business on any Record Date and ending with the opening of business on the next following principal or interest payment date, or (ii) with respect to any Bond or any portion thereof called for redemption prior to maturity, within 45 days prior to its redemption date.

IN THE EVENT any Paying Agent/Registrar for the Bonds is changed by the Issuer, resigns, or otherwise ceases to act as such, the Issuer has covenanted in the Bond Ordinance that it promptly will appoint a competent and legally qualified substitute therefor, and cause written notice thereof to be mailed to the registered owners of the Bonds.

IT IS HEREBY certified, recited and covenanted that this Bond has been duly and validly authorized, issued and delivered; that all acts, conditions and things required or proper to be performed, exist and be done precedent to or in the authorization, issuance and delivery of this Bond have been performed, existed and been done in accordance with law; and that annual ad valorem taxes sufficient to provide for the payment of the interest on and principal of this Bond, as such interest comes due and such principal matures, have been levied and ordered to be levied against all taxable property in said Issuer, and have been pledged for such payment, within the limit prescribed by law.

THE ISSUER HAS RESERVED THE RIGHT to amend the Bond Ordinance as provided therein, and under some (but not all) circumstances amendments thereto must be approved by the registered owners of a majority in aggregate principal amount of the outstanding Bonds.

BY BECOMING the registered owner of this Bond, the registered owner thereby acknowledges all of the terms and provisions of the Bond Ordinance, agrees to be bound by such terms and provisions, acknowledges that the Bond Ordinance is duly recorded and available for inspection in the official minutes and records of the governing body of the Issuer, and agrees that the terms and provisions of this Bond and the Bond Ordinance constitute a contract between each registered owner hereof and the Issuer.

IN WITNESS WHEREOF, the Issuer has caused this Bond to be signed with the manual or facsimile signature of the Mayor of the Issuer (or in the Mayor's absence, the Mayor Pro Tem of the Issuer) and countersigned with the manual or facsimile signature of the City Secretary of said Issuer, and has caused the official seal of the Issuer to be duly impressed, or placed in facsimile, on this Bond.

(signature)	(signature)
City Secretary	Mayor

(SEAL)

(b) Form of Paying Agent/Registrar's Authentication Certificate.

PAYING AGENT/REGISTRAR'S AUTHENTICATION CERTIFICATE
(To be executed if this Bond is not accompanied by an executed Registration Certificate of the Comptroller of Public Accounts of the State of Texas)

It is hereby certified that this Bond has been issued under the provisions of the Bond Ordinance described in the text of this Bond; and that this Bond has been issued in conversion or replacement of, or in exchange for, a Bond, Bonds, or a portion of a Bond or Bonds of a series that originally was approved by the Attorney General of the State of Texas and registered by the Comptroller of Public Accounts of the State of Texas.

Dated: _____.

_____, Texas
Paying Agent/Registrar

By: _____
Authorized Representative

(c) Form of Assignment.

ASSIGNMENT
(Please print or type clearly)

For value received, the undersigned hereby sells, assigns and transfers unto: _____

_____

Transferee's Social Security or Taxpayer Identification Number:_____

Transferee's name and address, including zip code:_____

_____

the within Bond and all rights thereunder, and hereby irrevocably constitutes and appoints _____, attorney, to register the transfer of the within Bond on the books kept for registration thereof, with full power of substitution in the premises.

Dated: .

Signature Guaranteed:

_____	_____
NOTICE: Signature(s) must be guaranteed by an eligible guarantor institution participating in a securities transfer association recognized signature guarantee program.	NOTICE: The signature above must correspond with the name of the registered owner as it appears upon the front of this Bond in every particular, without alteration or enlargement or any change whatsoever.

(d) Form of Registration Certificate of the Comptroller of Public Accounts.

COMPTROLLER'S REGISTRATION CERTIFICATE: REGISTER NO.

I hereby certify that this Bond has been examined, certified as to validity and approved by the Attorney General of the State of Texas, and that this Bond has been registered by the Comptroller of Public Accounts of the State of Texas.

Witness my signature and seal this _____.

_____
Comptroller of Public Accounts of the State of Texas

(COMPTROLLER'S SEAL)

(e) Initial Bond Insertions.

(i) The initial Bond shall be in the form set forth is paragraph (a) of this Section, except that:

A. immediately under the name of the Bond, the headings "Interest Rate" and "Maturity Date" shall both be completed with the words "As shown below" and "CUSIP No. _____" shall be deleted.

B. the first paragraph shall be deleted and the following will be inserted:

"THE CITY OF ROWLETT, TEXAS, in Dallas and Rockwall Counties, Texas (the "Issuer"), being a political subdivision and municipal corporation of the State of Texas, hereby promises to pay to the Registered Owner specified above, or registered assigns (hereinafter called the "Registered Owner"), on _____ in each of the years, in the principal installments and bearing interest at the per annum rates set forth in the following schedule:

Years	Principal Amount	Interest Rates

(Information from Section 2 to be inserted)

The Issuer promises to pay interest on the unpaid principal amount hereof (calculated on the basis of a 360-day year of twelve 30-day months) from _____, ____ at the respective Interest Rate per annum specified above. Interest is payable on _____, ____, and semiannually on each _____ and _____ thereafter to the date of payment of the principal installment specified above, or the date of redemption prior to maturity; except, that if this Bond is required to be authenticated and the date of its authentication is later than the first Record Date (hereinafter defined), such Principal Amount shall bear interest from the interest payment date next preceding the date of authentication, unless such date of authentication is after any Record Date but on or before the next following interest payment date, in which case such principal amount shall bear interest from such next following interest payment date; provided, however, that if on the date of authentication hereof the interest on the Bond or Bonds, if any, for which this Bond is being exchanged is due but has not been paid, then this Bond shall bear interest from the date to which such interest has been paid in full."

C. The Initial Bond shall be numbered "T-1."

SECTION 5. INTEREST AND SINKING FUND.

(a) A special "Interest and Sinking Fund" is hereby created and shall be established and maintained by the Issuer as a separate fund or account and the funds therein shall be deposited into and held in an account at an official depository bank of said Issuer. Said Interest and Sinking Fund shall be kept separate and apart from all other funds and accounts of said Issuer, and shall be used only for paying the interest on and principal of said Bonds. All amounts received from the sale of the Bonds as accrued interest shall be deposited upon receipt to the Interest and Sinking Fund, and all ad valorem taxes levied and collected for and on account of said Bonds shall be deposited, as collected, to the credit of said Interest and Sinking Fund. During each year while any of said Bonds are outstanding and unpaid, the governing body of said Issuer shall compute and ascertain a rate and amount of ad valorem tax that will be sufficient to raise and produce the money required to pay the interest on said Bonds as such interest comes due, and to provide and maintain a sinking fund adequate to pay the principal of said Bonds as such principal matures (but never less than 2% of the original amount of said Bonds as a sinking fund each year); and said tax shall be based on the latest approved tax rolls of said Issuer, with full allowances being made for tax delinquencies and the cost of tax collection. Said rate and amount of ad valorem tax is hereby levied, and is hereby ordered to be levied, against all taxable property in said Issuer, for each year while any of said Bonds are outstanding and unpaid,

and said tax shall be assessed and collected each such year and deposited to the credit of the aforesaid Interest and Sinking Fund. Said ad valorem taxes sufficient to provide for the payment of the interest on and principal of said Bonds, as such interest comes due and such principal matures, are hereby pledged for such payment, within the limit prescribed by law. If lawfully available moneys of the Issuer are actually on deposit in the Interest and Sinking Fund in advance of the time when ad valorem taxes are scheduled to be levied for any year, then the amount of taxes that otherwise would have been required to be levied pursuant to this Section may be reduced to the extent and by the amount of the lawfully available funds then on deposit in the Interest and Sinking Fund.

(b) Article 1208, Government Code, applies to the issuance of the Bonds and the pledge of the taxes granted by the Issuer under this Section and is therefore valid, effective, and perfected. Should Texas law be amended at any time while the Bonds are outstanding and unpaid, the result of such amendment being that the pledge of the taxes granted by the Issuer under this Section is to be subject to the filing requirements of Chapter 9, Business & Commerce Code, in order to preserve to the registered owners of the Bonds a security interest in said pledge, the Issuer agrees to take such measures as it determines are reasonable and necessary under Texas law to comply with the applicable provisions of Chapter 9, Business & Commerce Code and enable a filing of a security interest in said pledge to occur.

SECTION 6. DEFEASANCE OF BONDS.

(a) Any Bond and the interest thereon shall be deemed to be paid, retired and no longer outstanding (a "Defeased Bond") within the meaning of this Ordinance, except to the extent provided in subsection (d) of this Section, when payment of the principal of such Bond, plus interest thereon to the due date (whether such due date be by reason of maturity or otherwise) either (i) shall have been made or caused to be made in accordance with the terms thereof, or (ii) shall have been provided for on or before such due date by irrevocably depositing with or making available to the Paying Agent/Registrar in accordance with an escrow agreement or other instrument (the "Future Escrow Agreement") for such payment (1) lawful money of the United States of America sufficient to make such payment or (2) Defeasance Securities that mature as to principal and interest in such amounts and at such times as will insure the availability, without reinvestment, of sufficient money to provide for such payment, and when proper arrangements have been made by the Issuer with the Paying Agent/Registrar for the payment of its services until all Defeased Bonds shall have become due and payable. At such time as a Bond shall be deemed to be a Defeased Bond hereunder, as aforesaid, such Bond and the interest thereon shall no longer be secured by, payable from, or entitled to the benefits of, the ad valorem taxes herein levied and pledged as provided in this Ordinance, and such principal and interest shall be payable solely from such money or Defeasance Securities. Notwithstanding any other provision of this Ordinance to the contrary, it is hereby provided that any determination not to redeem Defeased Bonds that is made in conjunction with the payment arrangements specified in subsection (a)(i) or (ii) of this Section shall not be irrevocable, provided that: (1) in the proceedings providing for such payment arrangements, the Issuer expressly reserves the right to call the Defeased Bonds for redemption; (2) gives notice of the reservation of that right to the owners of the Defeased Bonds immediately following the making of the payment arrangements; and (3) directs that notice of the reservation be included in any redemption notices that it authorizes.

(b) Any moneys so deposited with the Paying Agent/Registrar may at the written direction of the Issuer be invested in Defeasance Securities, maturing in the amounts and times as hereinbefore set forth, and all income from such Defeasance Securities received by the Paying Agent/Registrar that is not required for the payment of the Bonds and interest thereon, with respect to which such money has been so deposited, shall be turned over to the Issuer, or deposited as directed in writing by the Issuer. Any Future Escrow Agreement pursuant to which the money and/or Defeasance Securities are held for the payment of Defeased Bonds may contain provisions permitting the investment or reinvestment of such moneys in Defeasance Securities or the substitution of other Defeasance Securities upon the satisfaction of the requirements specified in subsection (a)(i) or (ii) of this Section. All income from such Defeasance Securities received by the Paying

Agent/Registrar which is not required for the payment of the Defeased Bonds, with respect to which such money has been so deposited, shall be remitted to the Issuer or deposited as directed in writing by the Issuer.

(c) The term "Defeasance Securities" means any securities and obligations now or hereafter authorized by State law that are eligible to refund, retire or otherwise discharge obligations such as the Bonds.

(d) Until all Defeased Bonds shall have become due and payable, the Paying Agent/Registrar shall perform the services of Paying Agent/Registrar for such Defeased Bonds the same as if they had not been defeased, and the Issuer shall make proper arrangements to provide and pay for such services as required by this Ordinance.

(e) In the event that the Issuer elects to defease less than all of the principal amount of Bonds of a maturity, the Paying Agent/Registrar shall select, or cause to be selected, such amount of Bonds by such random method as it deems fair and appropriate.

SECTION 7. DAMAGED, MUTILATED, LOST, STOLEN, OR DESTROYED BONDS.

(a) Replacement Bonds. In the event any outstanding Bond is damaged, mutilated, lost, stolen or destroyed, the Paying Agent/Registrar shall cause to be printed, executed and delivered, a new Bond of the same principal amount, maturity and interest rate, as the damaged, mutilated, lost, stolen or destroyed Bond, in replacement for such Bond in the manner hereinafter provided.

(b) Application for Replacement Bonds. Application for replacement of damaged, mutilated, lost, stolen or destroyed Bonds shall be made by the registered owner thereof to the Paying Agent/Registrar. In every case of loss, theft or destruction of a Bond, the registered owner applying for a replacement Bond shall furnish to the Issuer and to the Paying Agent/Registrar such security or indemnity as may be required by them to save each of them harmless from any loss or damage with respect thereto. Also, in every case of loss, theft or destruction of a Bond, the registered owner shall furnish to the Issuer and to the Paying Agent/Registrar evidence to their satisfaction of the loss, theft or destruction of such Bond, as the case may be. In every case of damage or mutilation of a Bond, the registered owner shall surrender to the Paying Agent/Registrar for cancellation the Bond so damaged or mutilated.

(c) No Default Occurred. Notwithstanding the foregoing provisions of this Ordinance, in the event any such Bond shall have matured, and no default has occurred that is then continuing in the payment of the principal of, redemption premium, if any, or interest on the Bond, the Issuer may authorize the payment of the same (without surrender thereof except in the case of a damaged or mutilated Bond) instead of issuing a replacement Bond, provided security or indemnity is furnished as above provided in this Section.

(d) Charge for Issuing Replacement Bonds. Prior to the issuance of any replacement Bond, the Paying Agent/Registrar shall charge the registered owner of such Bond with all legal, printing, and other expenses in connection therewith. Every replacement Bond issued pursuant to the provisions of this Section by virtue of the fact that any Bond is lost, stolen or destroyed shall constitute a contractual obligation of the Issuer whether or not the lost, stolen or destroyed Bond shall be found at any time, or be enforceable by anyone, and shall be entitled to all the benefits of this Ordinance equally and proportionately with any and all other Bonds duly issued under this Ordinance.

(e) Authority for Issuing Replacement Bonds. In accordance with Sec. 1206.022, Government Code, this Section 7 of this Ordinance shall constitute authority for the issuance of any such replacement Bond without necessity of further action by the governing body of the Issuer or any other body or person, and the duty of the replacement of such Bonds is hereby authorized and imposed upon the Paying Agent/Registrar, and the Paying Agent/Registrar shall authenticate and deliver such Bonds in the form and manner and with the effect, as provided in Section 3(a) of this Ordinance for Bonds issued in conversion and exchange for

other Bonds.

SECTION 8. CUSTODY, APPROVAL, AND REGISTRATION OF BONDS; BOND COUNSEL'S OPINION; CUSIP NUMBERS AND CONTINGENT INSURANCE PROVISION, IF OBTAINED; ENGAGEMENT OF BOND COUNSEL.

(a) The Mayor of the Issuer and the Pricing Officer are hereby authorized to have control of the Bonds initially issued and delivered hereunder and all necessary records and proceedings pertaining to the Bonds pending their delivery and their investigation, examination, and approval by the Attorney General of the State of Texas, and their registration by the Comptroller of Public Accounts of the State of Texas. Upon registration of the Bonds said Comptroller of Public Accounts (or a deputy designated in writing to act for said Comptroller) shall manually sign the Comptroller's Registration Certificate attached to such Bonds, and the seal of said Comptroller shall be impressed, or placed in facsimile, on such Bond. The approving legal opinion of the Issuer's Bond Counsel and the assigned CUSIP numbers may, at the option of the Issuer, be printed on the Bonds issued and delivered under this Ordinance, but neither shall have any legal effect, and shall be solely for the convenience and information of the registered owners of the Bonds.

(b) The obligation of the initial purchaser to accept delivery of the Bonds is subject to the initial purchaser being furnished with the final, approving opinion of McCall, Parkhurst & Horton L.L.P., bond counsel to the Issuer, which opinion shall be dated as of and delivered on the date of initial delivery of the Bonds to the initial purchaser. The engagement of such firm as bond counsel to the Issuer in connection with issuance, sale and delivery of the Bonds is hereby approved and confirmed. The execution and delivery of an engagement letter between the Issuer and such firm, with respect to such services as bond counsel, is hereby authorized in such form as may be approved by the Mayor, and the Mayor is hereby authorized to execute such engagement letter.

SECTION 9. FEDERAL TAX MATTERS. The Issuer does not intend to issue the Bonds in a manner such that the Bonds would constitute obligations described in section 103(a) of the Internal Revenue Code of 1986 (the "Code").

SECTION 10. SALE OF BONDS AND APPROVAL OF OFFICIAL STATEMENT; FURTHER PROCEDURES.

(a) The Bonds shall be sold and delivered subject to the provisions of Section 1 and Section 3 and pursuant to the terms and provisions of a bond purchase agreement, bid form or purchase letter (the "Purchase Agreement") which the Pricing Officer is hereby authorized to execute and deliver and in which the purchaser or purchasers (the "Underwriters") of the Bonds shall be designated. The Bonds shall initially be registered in the name of the purchaser thereof as set forth in the Pricing Certificate.

(b) The Mayor and City Secretary are further authorized and directed to execute and deliver for and on behalf of the Issuer copies of a Preliminary Official Statement and Official Statement, prepared in connection with the offering of the Bonds by the Purchasers, in final form as may be required by the Purchasers, and such final Official Statement in the form and content as approved by the Pricing Officer or as manually executed by said officials shall be deemed to be approved by the City Council of the Issuer and constitute the Official Statement authorized for distribution and use by the Purchasers. The form and substance of the Preliminary Official Statement for the Bonds and any addenda, supplement or amendment thereto, all as approved by the Pricing Officer, are hereby deemed to be approved in all respects by the City Council of the Issuer, and the Preliminary Official Statement is hereby deemed final as of its date (except for the omission of pricing and related information) within the meaning and for the purpose of paragraph (b)(1) of the Rule (hereinafter defined).

(c) The Pricing Officer is authorized, in connection with effecting the sale of the Bonds, to obtain from a municipal bond insurance company so designated in the Pricing Certificate (the "Insurer") a municipal bond insurance policy (the "Insurance Policy") in support of the Bonds. To that end, should the Pricing Officer exercise such authority and commit the Issuer to obtain a municipal bond insurance policy, for so long as the Insurance Policy is in effect, the requirements of the Insurer relating to the issuance of the Insurance Policy as set forth in the Pricing Certificate are incorporated by reference into this Ordinance and made a part hereof for all purposes, notwithstanding any other provision of this Ordinance to the contrary. The Pricing Officer shall have the authority to execute any documents to effect the issuance of the Insurance Policy by the Insurer.

(d) The Mayor and Mayor Pro Tem, the City Secretary and the Pricing Officer shall be and they are hereby expressly authorized, empowered and directed from time to time and at any time to do and perform all such acts and things and to execute, acknowledge and deliver in the name and on behalf of the Issuer such documents, certificates and other instruments, whether or not herein mentioned, as may be necessary or desirable in order to carry out the terms and provisions of this Ordinance, the Pricing Certificate, the Bonds, the sale of the Bonds and the Official Statement. Prior to the initial delivery of the Bonds, the Mayor, each Pricing Officer and Bond Counsel are hereby authorized and directed to approve any technical changes or corrections to this Ordinance or to any of the instruments authorized and approved by this Ordinance necessary in order to (i) correct any ambiguity or mistake or properly or more completely document the transactions contemplated and approved by this Ordinance, (ii) obtain a rating from any of the national bond rating agencies, (iii) make changes to this Ordinance deemed reasonable and necessary by the Mayor or Pricing Officer, with the advice of Bond Counsel, to conform this Ordinance to the requirements set forth in a commitment from a bond insurer, or (iv) obtain the approval of the Bonds by the Texas Attorney General's office. In case any officer whose signature shall appear on any Bond shall cease to be such officer before the delivery of such Bond, such signature shall nevertheless be valid and sufficient for all purposes the same as if such officer had remained in office until such delivery.

SECTION 11. COMPLIANCE WITH RULE 15c2-12.

(a) Definitions. That as used in this Section, the following terms have the meanings ascribed to such terms below:

"MSRB" means the Municipal Securities Rulemaking Board.

"Rule" means SEC Rule 15c2-12, as amended from time to time.

"SEC" means the United States Securities and Exchange Commission.

(b) Annual Reports.

(i) The Issuer agrees to provide annually to the MSRB, in an electronic format as prescribed by the MSRB, within six months after the end of each fiscal year, financial information and operating data with respect to the Issuer, as provided in the Pricing Certificate. Any financial statements so to be provided shall be (1) prepared in accordance with the accounting principles described in the financial statements of the Issuer appended to the Official Statement, or such other accounting principles as the Issuer may be required to employ from time to time pursuant to state law or regulation, and (2) audited, if the Issuer commissions an audit of such statements and the audit is completed within the period during which they must be provided. If the audit of such financial statements is not complete within such period, then the Issuer shall provide unaudited financial information by the required time, and shall provide audited financial statements for the applicable

fiscal year to the MSRB, when and if the audit report on such statements become available.

(ii) If the Issuer changes its fiscal year, it will notify the MSRB of the change (and of the date of the new fiscal year end) prior to the next date by which the Issuer otherwise would be required to provide financial information and operating data pursuant to this Section. The financial information and operating data to be provided pursuant to this Section may be set forth in full in one or more documents or may be included by specific reference to any document that is available to the public on the MSRB's internet website or filed with the SEC. All documents provided to the MSRB pursuant to this Section shall be accompanied by identifying information as prescribed by the MSRB.

(c) Event Notices.

(i) The Issuer shall notify the MSRB in an electronic format as prescribed by the MSRB, in a timely manner (but not in excess of ten business days after the occurrence of the event) of any of the following events with respect to the Bonds, if such event is material within the meaning of the federal securities laws:

1. Non-payment related defaults;

2. Modifications to rights of Bondholders;

3. Bond calls;

4. Release, substitution, or sale of property securing repayment of the Bonds;

5. The consummation of a merger, consolidation, or acquisition involving an obligated person or the sale of all or substantially all of the assets of the obligated person, other than in the ordinary course of business, the entry into a definitive agreement to undertake such an action or the termination of a definitive agreement relating to any such actions, other than pursuant to its terms; and

6. Appointment of a successor or additional trustee or the change of name of a trustee.

(ii) The Issuer shall notify the MSRB in an electronic format as prescribed by the MSRB, in a timely manner (but not in excess of ten business days after the occurrence of the event) of any of the following events with respect to the Bonds, without regard to whether such event is considered material within the meaning of the federal securities laws:

1. Principal and interest payment delinquencies;

2. Unscheduled draws on debt service reserves reflecting financial difficulties;

3. Unscheduled draws on credit enhancements reflecting financial difficulties;

4. Substitution of credit or liquidity providers, or their failure to perform;

5. Adverse tax opinions or the issuance by the Internal Revenue Service of proposed or final determinations of taxability, Notices of Proposed Issue (IRS Form 5701–TEB) or other material notices or determinations with respect to the tax status of the Bonds, or other

material events affecting the tax status of the Bonds;

6. Tender offers;

7. Defeasances;

8. Rating changes; and

9. Bankruptcy, insolvency, receivership or similar event of an obligated person.

(iii) The Issuer shall notify the MSRB, in a timely manner, of any failure by the Issuer to provide financial information or operating data in accordance with subsection (b) of this Section by the time required by such subsection.

(d) Limitations, Disclaimers, and Amendments.

(i) The Issuer shall be obligated to observe and perform the covenants specified in this Section for so long as, but only for so long as, the Issuer remains an "obligated person" with respect to the Bonds within the meaning of the Rule, except that the Issuer in any event will give notice of any deposit made in accordance with this Ordinance or applicable law that causes Bonds no longer to be outstanding.

(ii) The provisions of this Section are for the sole benefit of the registered owners and beneficial owners of the Bonds, and nothing in this Section, express or implied, shall give any benefit or any legal or equitable right, remedy, or claim hereunder to any other person. The Issuer undertakes to provide only the financial information, operating data, financial statements, and notices which it has expressly agreed to provide pursuant to this Section and does not hereby undertake to provide any other information that may be relevant or material to a complete presentation of the Issuer's financial results, condition, or prospects or hereby undertake to update any information provided in accordance with this Section or otherwise, except as expressly provided herein. The Issuer does not make any representation or warranty concerning such information or its usefulness to a decision to invest in or sell Bonds at any future date.

(iii) UNDER NO CIRCUMSTANCES SHALL THE ISSUER BE LIABLE TO THE REGISTERED OWNER OR BENEFICIAL OWNER OF ANY BOND OR ANY OTHER PERSON, IN CONTRACT OR TORT, FOR DAMAGES RESULTING IN WHOLE OR IN PART FROM ANY BREACH BY THE ISSUER, WHETHER NEGLIGENT OR WITHOUT FAULT ON ITS PART, OF ANY COVENANT SPECIFIED IN THIS SECTION, BUT EVERY RIGHT AND REMEDY OF ANY SUCH PERSON, IN CONTRACT OR TORT, FOR OR ON ACCOUNT OF ANY SUCH BREACH SHALL BE LIMITED TO AN ACTION FOR MANDAMUS OR SPECIFIC PERFORMANCE.

(iv) No default by the Issuer in observing or performing its obligations under this Section shall comprise a breach of or default under this Ordinance for purposes of any other provision of this Ordinance. Nothing in this Section is intended or shall act to disclaim, waive, or otherwise limit the duties of the Issuer under federal and state securities laws.

(v) Should the Rule be amended to obligate the Issuer to make filings with or provide notices to entities other than the MSRB, the Issuer hereby agrees to undertake such obligation with respect to the Bonds in accordance with the Rule as amended. The provisions of this Section may be

amended by the Issuer from time to time to adapt to changed circumstances that arise from a change in legal requirements, a change in law, or a change in the identity, nature, status, or type of operations of the Issuer, but only if (1) the provisions of this Section, as so amended, would have permitted an underwriter to purchase or sell Bonds in the primary offering of the Bonds in compliance with the Rule, taking into account any amendments or interpretations of the Rule since such offering as well as such changed circumstances and (2) either (a) the registered owners of a majority in aggregate principal amount (or any greater amount required by any other provision of this Ordinance that authorizes such an amendment) of the outstanding Bonds consent to such amendment or (b) a person that is unaffiliated with the Issuer (such as nationally recognized bond counsel) determined that such amendment will not materially impair the interest of the registered owners and beneficial owners of the Bonds. The Issuer may also amend or repeal the provisions of this continuing disclosure agreement if the SEC amends or repeals the applicable provision of the Rule or a court of final jurisdiction enters judgment that such provisions of the Rule are invalid, but only if and to the extent that the provisions of this sentence would not prevent an underwriter from lawfully purchasing or selling Bonds in the primary offering of the Bonds. If the Issuer so amends the provisions of this Section, it shall include with any amended financial information or operating data next provided in accordance with subsection (b) of this Section an explanation, in narrative form, of the reason for the amendment and of the impact of any change in the type of financial information or operating data so provided.

SECTION 12. METHOD OF AMENDMENT. The Issuer hereby reserves the right to amend this Ordinance subject to the following terms and conditions, to-wit:

(a) The Issuer may from time to time, without the consent of any holder, except as otherwise required by paragraph (b) below, amend or supplement this Ordinance in order to (i) cure any ambiguity, defect or omission in this Ordinance that does not materially adversely affect the interests of the holders, (ii) grant additional rights or security for the benefit of the holders, (iii) add events of default as shall not be inconsistent with the provisions of this Ordinance and that shall not materially adversely affect the interests of the holders, (iv) qualify this Ordinance under the Trust Indenture Act of 1939, as amended, or corresponding provisions of federal laws from time to time in effect, or (v) make such other provisions in regard to matters or questions arising under this Ordinance as shall not be inconsistent with the provisions of this Ordinance and that shall not in the opinion of nationally recognized bond counsel materially adversely affect the interests of the holders.

(b) Except as provided in paragraph (a) above, the holders of Bonds aggregating in principal amount 51% of the aggregate principal amount of then outstanding Bonds that are the subject of a proposed amendment shall have the right from time to time to approve any amendment hereto that may be deemed necessary or desirable by the Issuer; provided, however, that without the consent of 100% of the holders in aggregate principal amount of the then outstanding Bonds, nothing herein contained shall permit or be construed to permit amendment of the terms and conditions of this Ordinance or in any of the Bonds so as to:

(1) Make any change in the maturity of any of the outstanding Bonds;

(2) Reduce the rate of interest borne by any of the outstanding Bonds;

(3) Reduce the amount of the principal of, or redemption premium, if any, payable on any outstanding Bonds;

(4) Modify the terms of payment of principal or of interest or redemption premium on

outstanding Bonds or any of them or impose any condition with respect to such payment; or

(5) Change the minimum percentage of the principal amount of the Bonds necessary for consent to such amendment.

(c) If at any time the Issuer shall desire to amend this Ordinance under this Section, the Issuer shall send by U.S. mail to each registered owner of the affected Bonds a copy of the proposed amendment. Such published notice shall briefly set forth the nature of the proposed amendment and shall state that a copy thereof is on file at the office of the Issuer for inspection by all holders of such Bonds.

(d) Whenever at any time within one year from the date of mailing of such notice the Issuer shall receive an instrument or instruments executed by the holders of at least 51% in aggregate principal amount of all of the Bonds then outstanding that are required for the amendment, which instrument or instruments shall consent to and approve such amendment, the Issuer may adopt the amendment in substantially the same form.

(e) Upon the adoption of any amendatory Ordinance pursuant to the provisions of this Section, this Ordinance shall be deemed to be modified and amended in accordance with such amendatory Ordinance, and the respective rights, duties, and obligations of the Issuer and all holders of such affected Bonds shall thereafter be determined, exercised, and enforced, subject in all respects to such amendment.

(f) Any consent given by the holder of a Bond pursuant to the provisions of this Section shall be irrevocable for a period of six months from the date of such consent, and shall be conclusive and binding upon all future holders of the same Bond during such period. Such consent may be revoked at any time after six months from the date of such consent by the holder who gave such consent, or by a successor in title, by filing notice with the Issuer, but such revocation shall not be effective if the holders of 51% in aggregate principal amount of the affected Bonds then outstanding, have, prior to the attempted revocation, consented to and approved the amendment.

For the purposes of establishing ownership of the Bonds, the Issuer shall rely solely upon the registration of the ownership of such Bonds on the registration books kept by the Paying Agent/Registrar.

SECTION 13. DEFAULT AND REMEDIES.

(a) Events of Default. Each of the following occurrences or events for the purpose of this Ordinance is hereby declared to be an Event of Default:

(i) the failure to make payment of the principal of or interest on any of the Bonds when the same becomes due and payable; or

(ii) default in the performance or observance of any other covenant, agreement or obligation of the Issuer, the failure to perform which materially, adversely affects the rights of the Registered Owners of the Bonds, including, but not limited to, their prospect or ability to be repaid in accordance with this Ordinance, and the continuation thereof for a period of 60 days after notice of such default is given by any Registered Owner to the Issuer.

(b) Remedies for Default.

(i) Upon the happening of any Event of Default, then and in every case, any Registered Owner or an authorized representative thereof, including, but not limited to, a trustee or trustees

therefor, may proceed against the Issuer for the purpose of protecting and enforcing the rights of the Registered Owners under this Ordinance, by mandamus or other suit, action or special proceeding in equity or at law, in any court of competent jurisdiction, for any relief permitted by law, including the specific performance of any covenant or agreement contained herein, or thereby to enjoin any act or thing that may be unlawful or in violation of any right of the Registered Owners hereunder or any combination of such remedies.

(ii) It is provided that all such proceedings shall be instituted and maintained for the equal benefit of all Registered Owners of Bonds then outstanding.

(c) Remedies Not Exclusive.

(i) No remedy herein conferred or reserved is intended to be exclusive of any other available remedy or remedies, but each and every such remedy shall be cumulative and shall be in addition to every other remedy given hereunder or under the Bonds or now or hereafter existing at law or in equity; provided, however, that notwithstanding any other provision of this Ordinance, the right to accelerate the debt evidenced by the Bonds shall not be available as a remedy under this Ordinance.

(ii) The exercise of any remedy herein conferred or reserved shall not be deemed a waiver of any other available remedy.

(iii) By accepting the delivery of a Bond authorized under this Ordinance, such Registered Owner agrees that the certifications required to effectuate any covenants or representations contained in this Ordinance do not and shall never constitute or give rise to a personal or pecuniary liability or charge against the officers, employees or trustees of the Issuer or the Board of Trustees.

SECTION 14. APPROVAL OF ESCROW AGREEMENT AND TRANSFER OF FUNDS. The Mayor or a Pricing Officer are are each further authorized to enter into and execute on behalf of the Issuer with the escrow agent named therein, an escrow or similar agreement, in the form and substance as shall be approved by the Pricing Officer, which agreement will provide for the payment in full of the Refunded Obligations. In addition, the Mayor or the Pricing Officer is authorized to purchase such securities, to execute such subscriptions for the purchase of the Escrowed Securities (as defined in the agreement), if any, and to authorize such contributions for the escrow fund as provided in the agreement.

SECTION 15. REDEMPTION OF REFUNDED OBLIGATIONS. (a) Subject to execution and delivery of the Purchase Agreement with the Purchaser, the Issuer hereby directs that the Refunded Obligations be called for redemption on the date and at such price as set forth in the Pricing Certificate. The Pricing Officer is hereby authorized and directed to issue or cause to be issued a Notice of Redemption of the Refunded Obligations in substantially the form set forth in Exhibit A attached hereto, completed with information from the Pricing Certificate, to the paying agent for the Refunded Obligations.

(b) In addition, the paying agent for the Refunded Obligations is hereby directed to provide the appropriate notices of redemption and defeasance as specified by the ordinance authorizing the issuance of Refunded Obligations and is hereby directed to make appropriate arrangements so that the Refunded Obligations may be redeemed on their redemption date. The Refunded Obligations shall be presented for redemption at the paying agent therefor, and shall not bear interest after the date fixed for redemption.

(c) If the redemption of the Refunded Obligations results in the partial refunding of any maturity of the Refunded Obligations, the Pricing Officer shall direct the paying agent/registrar for the Refunded Obligations to designate at random and by lot which of the Refunded Obligations will be payable from and

secured solely from ad valorem taxes of the Issuer pursuant to the ordinance of the Issuer authorizing the issuance of such Refunded Obligations (the "Refunded Bond Ordinance"). The paying agent/registrar shall notify by first-class mail all registered owners of all affected bonds of such maturities that: (i) a portion of such bonds have been refunded and are secured until final maturity solely with cash and investments maintained by the Escrow Agent in the Escrow Fund, (ii) the principal amount of all affected bonds of such maturities registered in the name of such registered owner that have been refunded and are payable solely from cash and investments in the Escrow Fund and the remaining principal amount of all affected bonds of such maturities registered in the name of such registered owner, if any, have not been refunded and are payable and secured solely from ad valorem taxes of the Issuer described in the Refunded Obligation Ordinance, (iii) the registered owner is required to submit his or her Refunded Obligations to the paying agent/registrar, for the purposes of re-registering such registered owner's bonds and assigning new CUSIP numbers in order to distinguish the source of payment for the principal and interest on such bonds, and (iv) payment of principal of and interest on such bonds may, in some circumstances, be delayed until such bonds have been re-registered and new CUSIP numbers have been assigned as required by (iii) above.

(d) The source of funds for payment of the principal of and interest on the Refunded Obligations on their respective maturity or redemption dates shall be from the funds deposited with the Escrow Agent pursuant to the Escrow Agreement approved in Section 14 of this Ordinance.

SECTION 16. APPROPRIATION. To pay the debt service coming due on the Bonds, if any (as determined by the Pricing Officer in the Pricing Certificate) prior to receipt of the taxes levied to pay such debt service, there is hereby appropriated from current funds on hand, which are hereby certified to be on hand and available for such purpose, an amount sufficient to pay such debt service, and such amount shall be used for no other purpose.

SECTION 17. SEVERABILITY. If any section, article, paragraph, sentence, clause, phrase or word in this Ordinance, or application thereof to any persons or circumstances is held invalid or unconstitutional by a court of competent jurisdiction, such holding shall not affect the validity of the remaining portion of this Ordinance, despite such invalidity, which remaining portions shall remain in full force and effect.

SECTION 18. EFFECTIVE DATE. In accordance with the provisions of Texas Government Code, Section 1201.028, this Ordinance shall be effective immediately upon its adoption by the City Council.

[Execution Page Follows]

PASSED, APPROVED AND EFFECTIVE THIS 1st day of July, 2014.

_____
Mayor
City of Rowlett, Texas

(CITY SEAL)

_____
City Secretary
City of Rowlett, Texas

SCHEDULE I

ELIGIBLE REFUNDED OBLIGATIONS

City of Rowlett, Texas General Obligation Bonds, Taxable Series 1997A

EXHIBIT A

NOTICE OF REDEMPTION

CITY OF ROWLETT, TEXAS
CUSIP Prefix No. _____

NOTICE IS HEREBY GIVEN that the City of Rowlett, Texas has called for redemption the outstanding Bonds of the City described as follows (collectively, the "Refunded Obligations"):

City of Rowlett, Texas, General Obligation Bonds, Taxable Series 1997A, date September 15, 1997, in the aggregate principal amount of $_____ (the "Refunded Obligations"), to the call date of the Series _____ Refunded Obligations so called for redemption at The Bank of New York Mellon Trust Company, N.A. Call date: _____.

Maturity Date	Original Principal Amount	Principal Amount to be Redeemed	CUSIP Suffix

On _____, interest on the Refunded Obligations shall cease to accrue and be payable.

THE REFUNDED OBLIGATIONS shall be redeemed at The Bank of New York Mellon Trust Company, N.A., as the Paying Agent/Registrar for said Refunded Obligations. Upon presentation of the Refunded Obligations at the Paying Agent/Registrar on the aforementioned redemption date, the holder thereof shall be entitled to receive the redemption price equal to par and accrued interest to the redemption date.

NOTICE IS GIVEN that due and proper arrangements have been made for providing the place of payment of said Refunded Obligations called for redemption with funds sufficient to pay the principal amount of said Refunded Obligations and the interest thereon to the redemption date. In the event said Refunded Obligations, or any of them are not presented for redemption by the date fixed for their redemption, they shall not thereafter bear interest.

UNDER THE PROVISIONS of Section 3406 of the Internal Revenue Code of 1986, as amended paying agents making payments of interest and principal on municipal securities may be obligated to withhold a tax from remittance to individuals who have failed to furnish the paying agent with a valid taxpayer identification number. Registered holders who wish to avoid the imposition of the tax should submit certified taxpayer identification numbers (via form W-9) when presenting the Refunded Obligations for payment.

THIS NOTICE is issued and given pursuant to the redemption provisions in the proceedings

authorizing the issuance of the aforementioned Refunded Obligations and in accordance with the recitals and provisions of said Refunded Obligations.

NOTICE IS FURTHER GIVEN that the Refunded Obligations should be submitted to either of the following addresses:

First Class/Registered/ Certified Mail	Express Delivery	Hand Delivery
The Bank of New York Mellon Trust Company, N.A. Global Corporate Trust P.O. Box 396 East Syracuse, New York 13057	The Bank of New York Mellon Trust Company, N.A. Global Corporate Trust 111 Sanders Creek Parkway East Syracuse, New York 13057	The Bank of New York Mellon Trust Company, N.A. Global Corporate Trust Corporate Trust Window 101 Barclay Street 1ST Floor East New York, New York 10286

CITY OF ROWLETT, TEXAS

City of Rowlett

Staff Report

4000 Main Street
P.O. Box 99
Rowlett, TX 75030-0099
www.rowlett.com

AGENDA DATE: 07/01/14 **AGENDA ITEM**: 8F

TITLE

Consider an ordinance authorizing the discharge and redemption of the City's General Obligation Refunding Bonds, Taxable Series 2010A; approving an escrow agreement; and enacting other provisions relating to the subject.

STAFF REPRESENTATIVE

Brian Funderburk, City Manager
Alan Guard, Chief Financial Officer

SUMMARY

American Golf Corporation and the City of Rowlett desire to make revisions in the current lease agreement for the operation of the Waterview Golf Course, and a concurrent restructuring of the debt related to the golf course. This item for Council consideration is the ordinance authorizing establishment of an escrow fund to hold funds for the defeasement of the City's General Obligation Refunding Bonds, Taxable Series 2010A. The money for the escrow fund, approximately $1.19 million, will be provided by American Golf Corporation.

BACKGROUND INFORMATION

On September 1, 1999, the City of Rowlett entered into a lease agreement for Waterview Golf Course with American Golf Corporation (AGC). Among other things, the lease calls for AGC to manage the golf course and provides for a schedule of rental payments. These payments were originally designed around the anticipated annual debt on the bonds issued to build the course and contained an escalation over time. In June, AGC proposed to restructure the bonds at their cost. The proposal includes the complete defeasement of the 2010A bonds from a contribution of $1.19 million and the restructuring of the 1997A bonds from a contribution of $1.0 million that would reduce the total debt and extend the life to 25 years. The defeasement of the 2010A bonds and the restructuring of the 1997A bonds would result in annual payments of approximately $250,000-$255,000 per year and AGC has requested that their annual rental payment be reset to match the payment of the bonds.

The current lease represents a 30-year agreement beginning May 1, 2000, and ending December 31, 2030. The agreement provides for two additional five-year lease terms at option of Lessee. If exercised, the lease could be extended through the end of December 31, 2040.

This item for Council consideration is the ordinance authorizing the establishment of an escrow fund to hold funds for the defeasement of the City's General Obligation Refunding Bonds, Taxable Series 2010A. The money for the escrow fund, approximately $1.19 million, will be provided by American Golf Corporation.

DISCUSSION

Regarding the refunding of the 2010A and 1997A General Obligation Bonds, American Golf has made a proposal to the City to defease the 2010A bonds and refinance the 1997A bonds in order to reduce the annual payment, establish budget certainty and eliminate the risk of increasing interest rates. This refunding will extend the original term of the debt by 13 years. This refunding will be done as part of an overall package that includes improvements at the Waterview Golf Course, extension of the current contract with American Golf, and a commitment by American Golf to provide funds on an annual basis for future improvements at the golf course.

AGC has asked the City to consider restructuring the 1999 lease agreement. The terms of the proposal are as follows:

- AGC will invest $2.19M as follows:
  - $1.19M to completely defease the outstanding 2010A bonds.
  - $1.0M to buy down principal on 1997A bonds and restructure and extend the term for 25 years.
- City will modify rental income to match the new debt service schedule.
- AGC will exercise the option to extend agreement coterminous with new 25-year bond term. This will end their term on August 15, 2039.
- AGC will invest $75,000 to upgrade kitchen and appurtenances (i.e. tables, chairs, linens, etc). In addition, AGC will invest $139,618 to complete improvements to the clubhouse.
- AGC will set aside 3% of annual revenue into a CapEx fund for future improvements.

On May 20, 2014, City staff presented a recommended list of projects from the Golf Advisory Board as well as the funding strategy. This list totaled $830,448, which would be funded by a combination of contributions from the Waterview HOA, existing funds in the Golf Fund, and a three-year note for the remaining balance. Under AGC's proposal, alternate #1 from the clubhouse totaling $147,056 will be removed, the City's portion in cash from the Golf Fund would increase by $172,682 and AGC would cover the balance of $139,618 with no financing necessary. In addition, the City will retain a reserve totaling $255,000, equivalent to one-year debt service.

The proposed amendment to the lease agreement, also on tonight's agenda, will reduce the average annual debt service from $455,000 based on the current schedule to about $250,000-$255,000 a year. It will also extend the remaining debt from the 14 years remaining to 25 years.

This ordinance establishes an escrow account in which an American Golf contribution will be deposited in order to defease and discharge the 2010A bonds. This ordinance has been prepared by the City's bond counsel.

FINANCIAL/BUDGET IMPLICATIONS

The City will be required to defease the 2010A bonds and refinance the 1997A bonds based on the $2.19 million in contributions from American Golf. The overall annual debt service will drop to about $250,000-$255,000.

RECOMMENDED ACTION

Council approve the ordinance authorizing the discharge and redemption of the City's General Obligation Refunding Bonds, Taxable Series 2010A; approving an escrow agreement; and enacting other provisions relating to the subject.

ATTACHMENT

Exhibit A – Rowlett GO Ref 2010A – Defeasance Ordinance

EXHIBIT A

ORDINANCE NO. _____

ORDINANCE AUTHORIZING DISCHARGE AND REDEMPTION OF THE CITY'S GENERAL OBLIGATION REFUNDING BONDS, TAXABLE SERIES 2010A; APPROVING AN ESCROW AGREEMENT; AND ENACTING OTHER PROVISIONS RELATING TO THE SUBJECT

WHEREAS, the City of Rowlett, Texas (the "City") has issued, and there are currently outstanding, the City's General Obligation Refunding Bonds, Taxable Series 2010A (the "2010A Bonds"), maturing on August 15 in each of the years 2015, 2017, 2020, 2025 and 2028, in the aggregate principal amount of $1,010,000;

WHEREAS, this City Council finds and determines that it is necessary and in the best interests of the City to provide for the payment, discharge and redemption of the 2010A Bonds, with funds available for such purpose;

WHEREAS, in the ordinance that authorized the issuance of the 2010A Bonds (the "Bond Ordinance"), the City reserved the option to redeem the 2010A Bonds before their scheduled maturity in whole or in part on August 15, 2020, or on any thereafter, at a price equal to the principal amount of the 2010A Bonds so called for redemption plus accrued interest to the redemption date;

WHEREAS, the Bond Ordinance and Chapter 1207, Texas Government Code, authorize the City to deposit available funds with the Paying Agent/Registrar for the 2010A Bonds, and such deposit, if made in sufficient amounts, shall constitute the making of firm banking and financial arrangements for the discharge and final payment of the 2010A Bonds;

WHEREAS, concurrently with the discharge and redemption of the 2010A Bonds, the City is issuing its General Obligation Bonds, Taxable Series 2014 (the "2014 Bonds"), to discharge and redeem the City's outstanding General Obligation Bonds, Taxable Series 1997A, in a common plan of financing; and

WHEREAS, it is officially found, determined and declared that the meeting at which this Ordinance has been adopted was open to the public and public notice of the date, hour, place and subject of said meeting, including this Ordinance, was given, all as required by the applicable provisions of Tex. Gov't Code Ann. ch. 551. Now, Therefore

BE IT ORDAINED BY THE CITY COUNCIL OF THE CITY OF ROWLETT:

Section 1. Findings. The declarations, determinations and findings declared, made and found in the preamble to this Ordinance are hereby adopted, restated and made a part of the operative provisions hereof.

Section 2. Discharge and Redemption of 2010A Bonds.

(a) The provisions of this Section are conditioned upon and shall be effective only upon the issuance and delivery of the 2014 Bonds.

(b) The Mayor or City Manager is authorized to enter into and execute on behalf of the City with the Paying Agent/Registrar for the 2010A Bonds, as escrow agent, an escrow agreement (the "Escrow Agreement"), in the form and substance presented at this meeting, which Escrow Agreement will provide for the payment in full of the 2010A Bonds.

(c) On or before August 14, 2014, the City shall transfer to the Paying Agent/Registrar for the 2010A Bonds, for deposit into the escrow fund established pursuant to the Escrow Agreement, funds in an amount

sufficient to pay the principal of all of the outstanding 2010A Bonds and accrued interest thereon on the respective maturity or redemption date. Funds on deposit in the interest and sinking fund for the Bonds and other available funds as necessary are hereby authorized and appropriated in the amounts necessary for such purpose.

(d) The 2010A Bonds maturing on and after August 15, 2021, are hereby called for redemption on August 15, 2020 (the "Redemption Date") at a redemption price equal to the principal amount thereof plus accrued interest to the date of redemption. Interest on the 2010A Bonds called for redemption shall cease to accrue on the Redemption Date. The Paying Agent/Registrar is hereby authorized and directed to call such 2010A Bonds for redemption.

(e) Notice of redemption of the 2010A Bonds called for redemption shall be given in the manner and within the times required by the Bond Ordinance, and the Paying Agent/Registrar for the 2010A Bonds called for redemption is hereby authorized and directed to cause notice of redemption to be provided at the time and in the form and manner prescribed in the Bond Ordinance.

Section 3. Authorization of Actions. The officers and employees of the City are hereby authorized and directed to take such actions and to execute and deliver such documents, certificates and receipts, including without limitation notice of redemption and material events notices with respect to the 2010A Bonds, as necessary or appropriate to consummate the transactions authorized by this Ordinance and to redeem the 2010A Bonds in accordance with the provisions and requirements of the Bond Ordinance.

Section 4. Effective Date. This Ordinance shall be effective immediately upon its adoption by the City Council.

(Execution Page Follows)

PASSED, APPROVED AND EFFECTIVE THIS 1st day of July, 2014.

_____
Mayor
City of Rowlett, Texas

(CITY SEAL)

_____
City Secretary
City of Rowlett, Texas